Image Reader - B1

iR2200i/2800i/3300i

PARTS CATALOG

REVISION 0

Canon

FEB. 2002

FY8-31FU-000

COPYRIGHT ©2002 CANON INC.
CANON Image Reader-B1/iR2200i/2800i/3300i REV.0 FEB. 2002 PRINTED IN JAPAN [IMPRIME AU JAPON]

PREFACE

This Parts Catalog contains listings of parts used in the Canon Image Reader-B1/iR2200i/2800i/3300i. Diagrams are provided with the listings to aid the service technician in identifying clearly, the item to be orderd.

Whenever ordering parts, consult this Parts Catalog for all of the information pertaining to each item. Be sure to include, in the Parts Request, the full item description, the item part number, and the quantity.

Canon Inc.

Office Imaging Products Quality Assurance Center
5-1, Hakusan 7-chome,
Toride-city, Ibaraki 302-8501, Japan

COPYRIGHT © 2002 CANON INC.

Printed in Japan
Imprimé au Japon

Use of this manual should be strictly supervised to avoid disclosure of confidential information.

CONTENTS

– Image Reader-B1 –

A. ASSEMBLY LOCATION DIAGRAM

001. MOUNTING HARDWARE 1
002. MOUNTING HARDWARE 2

210. READER ASSEMBLY

420. MIRROR ASSEMBLY 1
430. MIRROR ASSEMBLY 2

931. READER CONTROLLER PCB ASSEMBLY

B1. LIST OF CONNECTORS
B2. LIST OF ELECTRIC PARTS

– iR2200i/2800i/3300i –

A. ASSEMBLY LOCATION DIAGRAM

100. EXTERNAL COVERS, PANELS, ETC.
101. MACHINE FRONT PLATE
102. INTERNAL COMPONENTS 1
103. INTERNAL COMPONENTS 2
104. INTERNAL COMPONENTS 3
105. INTERNAL COMPONENTS 4
106. INTERNAL COMPONENTS 5
107. MACHINE REAR PLATE
110. POWER CORD TERMINAL ASSEMBLY(100/120V)
111. POWER CORD TERMINAL ASSEMBLY(220/240V)
120. RIGHT DOOR ASSEMBLY
130. CONTROL PANEL ASSEMBLY
190. DEVELOPING FAN ASSEMBLY
191. MACHINE EXHAUST FAN ASSEMBLY

250. MAIN DRIVE ASSEMBLY
260. PAPER PICK-UP DRIVE ASSEMBLY
261. DUPLEXING DRIVE ASSEMBLY
280. FIXING FEEDER DRIVE ASSEMBLY

300. CASSETTE
310. PAPER PICK-UP MOUNT ASSEMBLY
315. MULTI FEEDER TRAY ASSEMBLY
320. REGISTRATION FRONT GUIDE ASSEMBLY
330. PAPER FEEDER ASSEMBLY
350. PAPER DELIVERY ASSEMBLY
351. LEFT VERTICAL PATH ASSEMBLY
360. DUPLEXING FEEDER ASSEMBLY

460. SCANNER ASSEMBLY

500. DRUM CARTRIDGE ASSEMBLY

640. DEVELOPING ASSEMBLY

810. FIXING ASSEMBLY

900. CONTROLLER BOX ASSEMBLY
910. HV POWER SUPPLY PCB ASSEMBLY
920. CONTROL PANEL CPU PCB ASSEMBLY
921. CONTROL PANEL INVERTER PCB ASSEMBLY
930. DC CONTROLLER PCB ASSEMBLY
940. PAPER PICK-UP PCB ASSEMBLY
950. RESOLUTION CONVERSION PCB ASSEMBLY

B1. LIST OF CONNECTORS
B2. LIST OF MOTORS
B3. LIST OF FAN MOTORS
B4. LIST OF SENSORS
B5. LIST OF CLUTCHES, AND OTHERS
B6. LIST OF HEATERS, LAMPS, ETC.
B7. LIST OF PCBS

– Cassette Feeding Unit-W1 –

ZA. ASSEMBLY LOCATION DIAGRAM

Z10. EXTERNAL COVERS, PANELS, ETC.
Z11. INTERNAL COMPONENTS
Z12. RIGHT DOOR ASSEMBLY

Z20. MAIN DRIVE ASSEMBLY

Z32. CASSETTE HEATER ASSEMBLY (ACCESSORY)
Z35. VERTICAL PATH ASSEMBLY

Z40. PAPER PICK-UP ASSEMBLY

Z90. DC CONTROLLER PCB ASSEMBLY
Z91. PEDESTAL PICK-UP PCB ASSEMBLY

ZB1. LIST OF CONNECTORS
ZB2. LIST OF ELECTRIC PARTS

CONTENTS

– Paper Deck -L1 –

RA. ASSEMBLY LOCATION DIAGRAM

R01. MOUNTING HARDWARE

R10. EXTERNAL COVERS, PANELS, ETC
R11. INTERNAL COMPONENTS

R30. PAPER STOCK ASSEMBLY
R35. PAPER DECK HEATER ASSEMBLY (ACCESSORY)

R40. PAPER PICK-UP ASSEMBLY

RB1. LIST OF CONNECTORS
RB2. LIST OF ELECTRIC PARTS

– Inner 2way Tray A1 –

QA. ASSEMBLY LOCATION DIAGRAM

Q01. MOUNTING HARDWARE

Q30. DELIVERY ASSEMBLY

QB1. LIST OF CONNECTORS
QB2. LIST OF ELECTRIC PARTS

– Envelope Feeder Attachment -B1 –

LA. ASSEMBLY LOCATION DIAGRAM

L10. ENVELOPE FEEDER ATTACHMENT

– Token Ring Network Interface Adapter iN-TR2 –

NA. ASSEMBLY LOCATION DIAGRAM

N90. TOKENRING BOARD PCB ASSEMBLY

– Super G3 FAX Board -J1/J2 –

GA. ASSEMBLY LOCATION DIAGRAM

G90. SUPER G3 FAX KIT
G91. SPEAKER ASSEMBLY

GB1. LIST OF CONNECTORS
GB2. LIST OF ELECTRIC PARTS

– CONTROL FONT ROM CFR-M1 –

EA. ASSEMBLY LOCATION DIAGRAM

E90. CONTROL FONT ROM

C. LIST OF STANDARD FASTENERS

D1. NUMERICAL INDEX (Image Reader-B1)
D2. NUMERICAL INDEX (iR2200i/2800i/3300i)
D3. NUMERICAL INDEX (Cassette Feeding Unit-W1)
D4. NUMERICAL INDEX (Paper Deck -L1)
D5. NUMERICAL INDEX (Inner 2way Tray A1)
D6. NUMERICAL INDEX (Envelope Feeder Attachment -B1)
D7. NUMERICAL INDEX (Network Interface Adapter iN-TR2)
D8. NUMERICAL INDEX (Super G3 FAX Board -J1/J2)
D9. NUMERICAL INDEX (CONTROL FONT ROM)

COPYRIGHT ©2002 CANON INC.

Image Reader - B1

F13-9502	(AB SIZE)	XHP00001 -

Image Reader - B1

F13-9512	(A/INCH SIZE)	XHQ00001 -
F13-9522	(A SIZE)	XHR00001 -
F13-9532	(AB/INCH SIZE)	XHS00001 -

COPYRIGHT © 2002 CANON INC.

CONTENTS

A. ASSEMBLY LOCATION DIAGRAM

001. MOUNTING HARDWARE 1
002. MOUNTING HARDWARE 2

210. READER ASSEMBLY

420. MIRROR ASSEMBLY 1
430. MIRROR ASSEMBLY 2

935. READER CONTROLLER PCB ASSEMBLY

B1. LIST OF CONNECTORS
B2. LIST OF ELECTRIC PARTS

D1. NUMERICAL INDEX
(Image Reader - B1)

COPYRIGHT ©2002 CANON INC.

FIGURE A ASSEMBLY LOCATION DIAGRAM

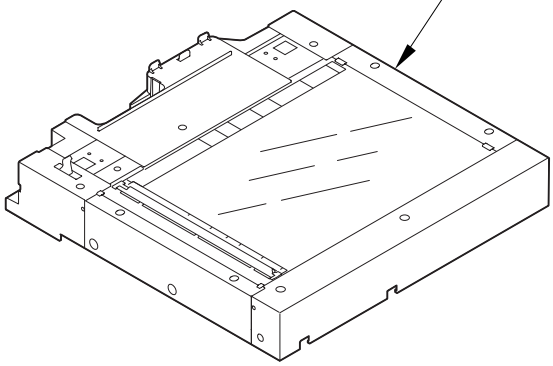

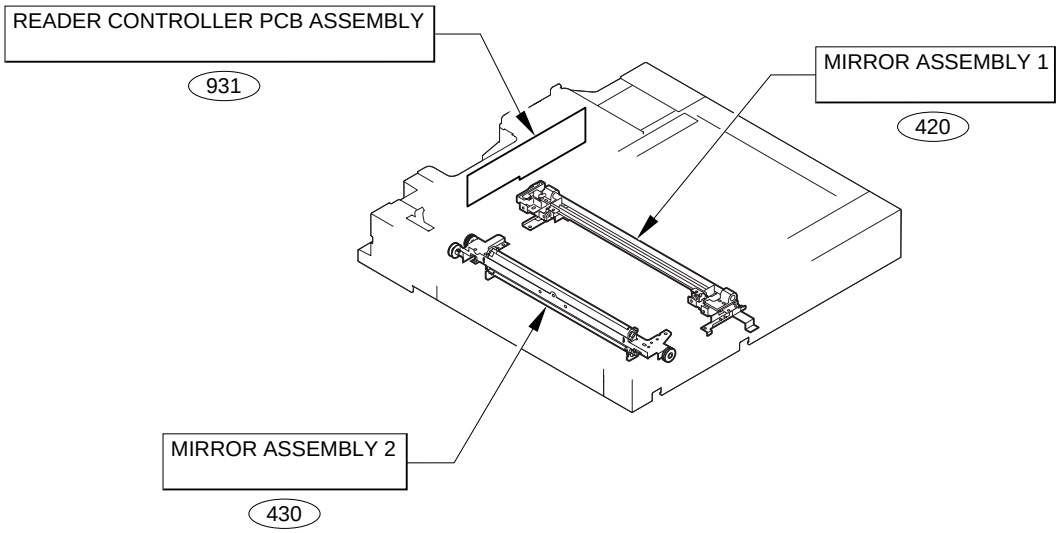

FIGURE 001 MOUNTING HARDWARE 1

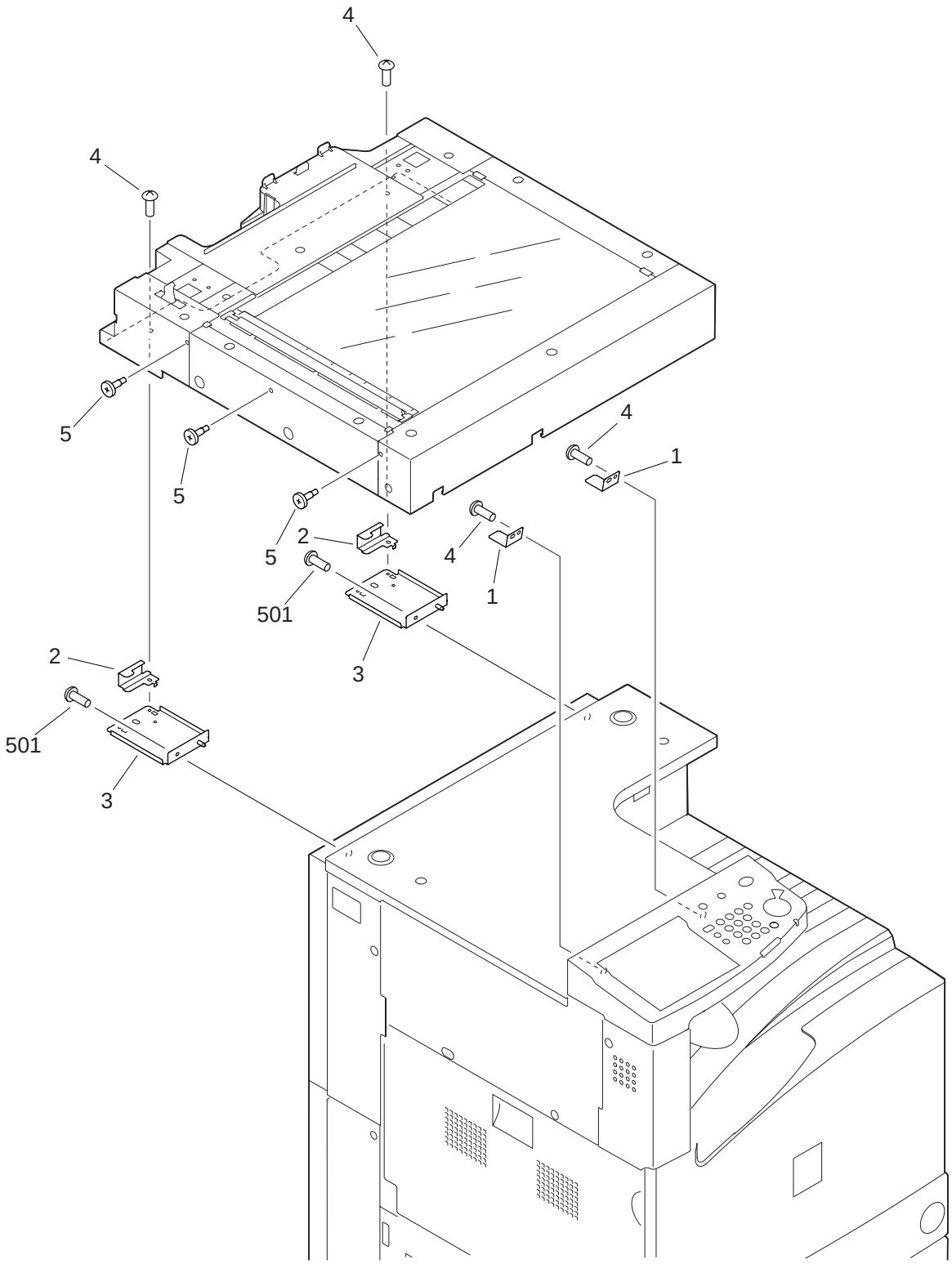

COPYRIGHT ©2002 CANON INC.

FIGURE & KEY NO.	PART NUMBER	RANK	Q'TY	DESCRIPTION	SERIAL NUMBER / REMARKS
001 -	NPN		RF	MOUNTING HARDWARE 1	
1	FB6-0334-000		2	CLAW, READER FIXING, FRONT	
2	FF6-2006-000		2	PLATE, READER FIXING	
3	FF6-1484-000		2	PLATE, READER FIXING	
4	XA9-1031-000		4	SCREW,MACH.,TRUSS HEAD,M4X8	
5	FS5-9665-000		3	SCREW, MIRROR FIXED	
501	XB1-2401-007		2	SCREW,MACH.,TRUSS HEAD,M4X10	

FIGURE 002 MOUNTING HARDWARE 2

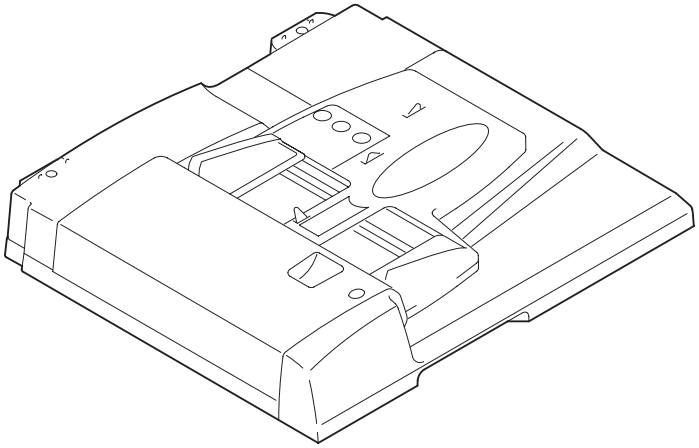

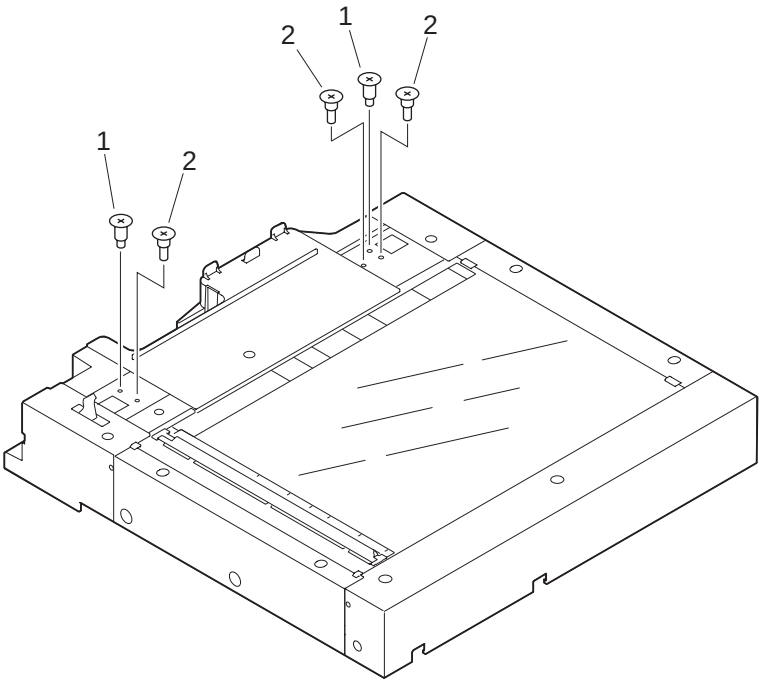

COPYRIGHT ©2002 CANON INC.

FIGURE & KEY NO.	PART NUMBER	RANK	Q'TY	DESCRIPTION	SERIAL NUMBER / REMARKS
002 -	NPN		RF	MOUNTING HARDWARE 2	
1	FS2-9540-000		2	SCREW,STEPPED,M5	
2	FS2-9542-000		3	SCREW,STEPPED	

FIGURE 210 READER ASSEMBLY (1/2)

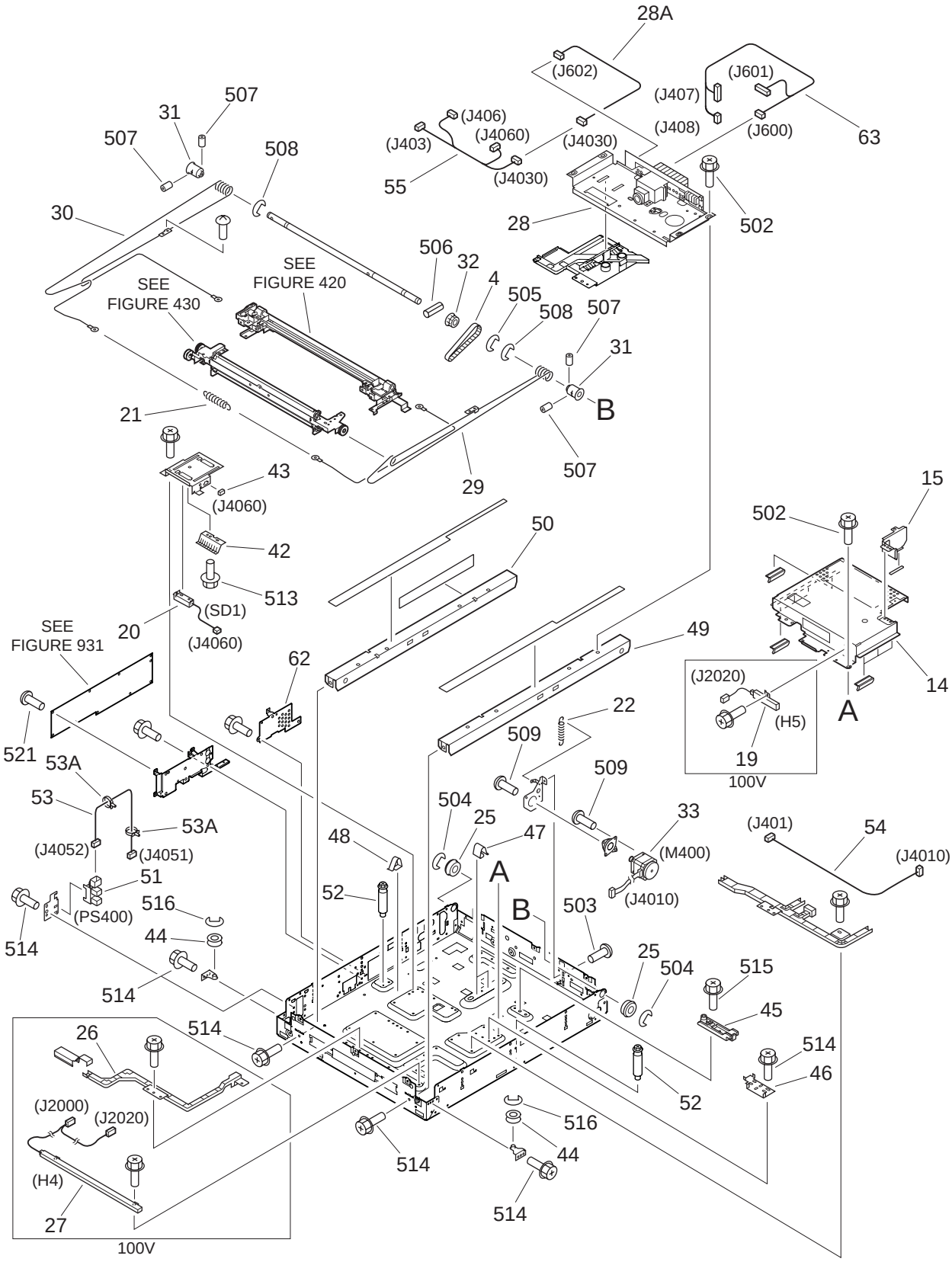

COPYRIGHT ©2002 CANON INC.

FIGURE 210 READER ASSEMBLY (2/2)

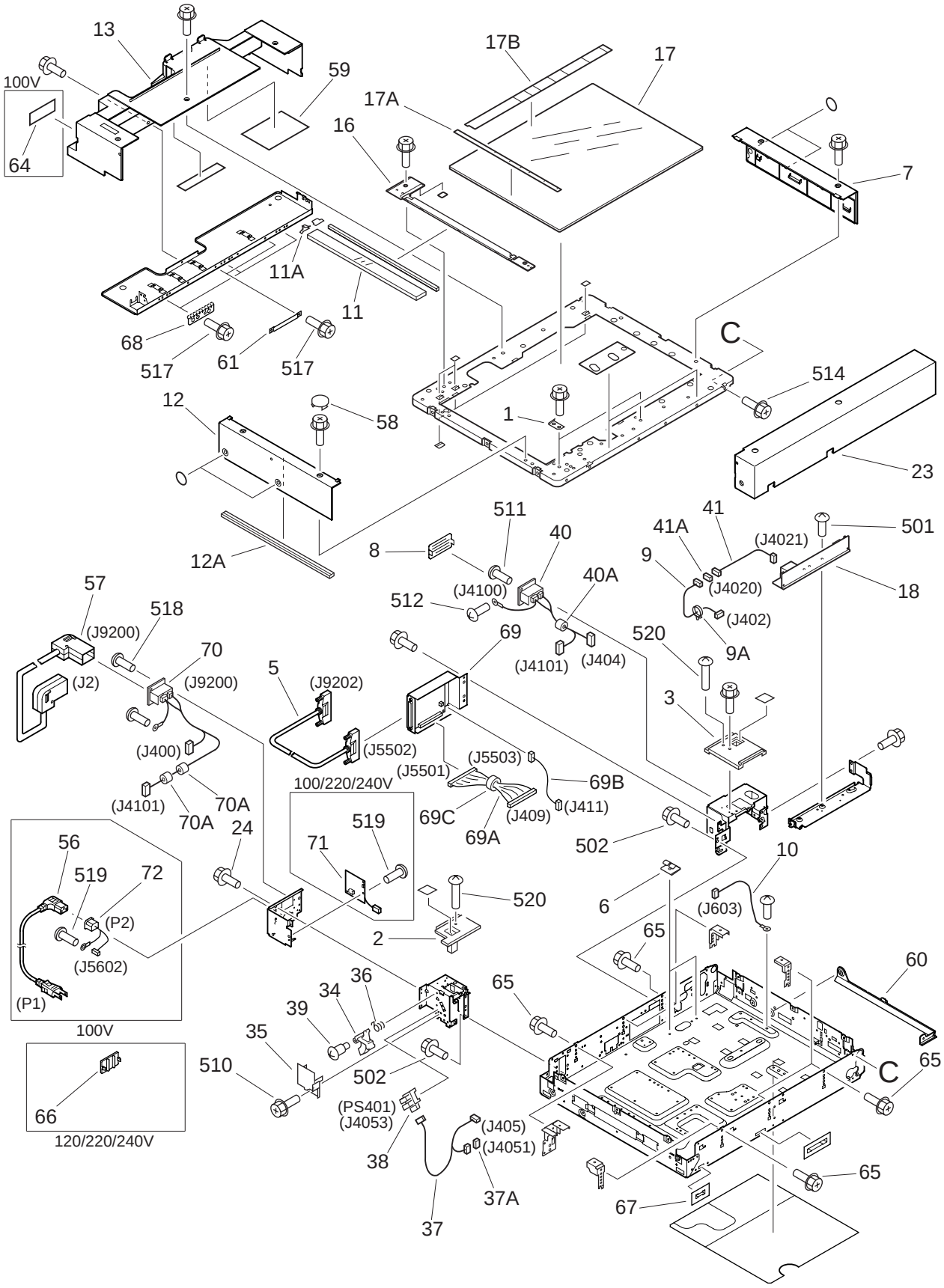

FIGURE & KEY NO.	PART NUMBER	RANK	Q'TY	DESCRIPTION	SERIAL NUMBER / REMARKS
210 -	NPN		RF	READER ASSEMBLY	
1	FB4-5402-000		2	PLATE, GLASS	
2	FB5-3058-000		1	COVER, POCKET, LEFT	
3	FB5-3059-000		1	COVER, POCKET, RIGHT	
4	FB5-5206-000		1	BELT, SCANNER DRIVE	
5	FH2-6756-000		1	CABLE, DDI-S INTERFACE	J5502,9202
6	FB5-5239-000		2	PLATE, INVERTER	
7	FB5-5221-000		1	PANEL, READER, RIGHT	
8	FH2-6552-000		1	COVER, CONNECTOR	
9	FF3-4279-000		1	CABLE, INVERTER	J402,4020
9A	WT2-5565-000		1	CLAMP, CABLE	
10	FF3-4284-000		1	CABLE, CCD GROUNDING	J603
11	FF5-9816-000		1	GLASS, READER	
11A	FB5-4586-000		1	SPRING, GROUNDING	
12	FF6-0342-000		1	PANEL, READER, LEFT	
12A	FB5-5567-000		1	SEAL, GLASS, 2	
13	FF6-0384-000		1	PANEL, REAR	
14	FF6-0328-000		1	SHIELD, CCD	
15	FF6-0329-000		1	SHIELD, MOTOR	
16	FF6-0340-000		1	GUIDE, PAPER	
17	FF9-1858-000		1	GLASS, COPYBOARD	AB SIZE
	FF9-1859-000		1	GLASS, COPYBOARD	INCH/A SIZE
	FF9-1860-000		1	GLASS, COPYBOARD	A SIZE
	FF9-1861-000		1	GLASS, COPYBOARD	INCH/AB SIZE
17A	FB5-3052-000		1	PLATE, WIDTH INDEX	AB SIZE
	FB5-4557-000		1	PLATE, WIDTH INDEX	INCH/A SIZE
	FB5-4558-000		1	PLATE, WIDTH INDEX	A SIZE
	FB5-4559-000		1	PLATE, WIDTH INDEX	INCH/AB SIZE
17B	FB5-4535-000		1	PLATE, LENGTH INDEX	AB SIZE
	FB5-4553-000		1	PLATE, LENGTH INDEX	INCH/A SIZE

COPYRIGHT ©2002 CANON INC.

FIGURE & KEY NO.	PART NUMBER	RANK	Q'TY	DESCRIPTION	SERIAL NUMBER / REMARKS
210 - 17B	FB5-4554-000		1	PLATE, LENGTH INDEX	A SIZE
	FB5-4555-000		1	PLATE, LENGTH INDEX	INCH/AB SIZE
18	FH3-7211-020		1	LAMP INVERTER PCB ASSEMBLY	
19	FH7-4666-000		1	HEATER, PLATE	100V H5 J2020
20	FH7-7550-000		1	PAPER DETECT SENSOR UNIT	SD1 J4060
21	FS6-2913-000		1	SPRING, TENSION	
22	FS7-2399-000		1	SPRING, TENSION	
23	FF6-0346-000		1	PANEL, READER, FRONT	
24	XA9-0721-000		2	SCREW,RS,M4X10	
25	XG9-0250-000		2	BEARING, BALL	
26	FB5-3498-000		1	GUIDE, HEATER CABLE	100V
27	FH7-4665-000		1	HEATER, PLATE	100V H4 J2000,2020
28	FG6-7982-000		1	CCD UNIT	
28A	FF3-4269-000		1	CABLE, CCD POWER SUPPLY	J602,4030
29	FB5-3085-000		1	WIRE, SCANNER, FRONT (MECH)	
30	FB5-3086-000		1	WIRE, SCANNER, REAR (MECH)	
31	FB5-3087-000		2	PULLEY	
32	FS5-3826-000		1	PULLEY, 36T	
33	FH6-1856-000		1	MOTOR, STEPPING	M400 J4010
34	FB5-3090-000		1	LEVER, SENSOR	
35	FB5-3635-000		1	COVER, SENSOR	
36	FB5-3636-000		1	SPRING, TORSION	
37	FF3-4280-000		1	CABLE, DF MOUNT, LEFT	J405,4051,4053
37A	VS1-5057-003		1	CONNECTOR, SNAP TIGHT	J4051
38	FH7-7557-000		1	PHOTO-INTERRUPTER	PS401 J4053
39	FS5-9227-000		1	SCREW,STEPPED,M4	
40	FG3-1679-000		1	CABLE, ADF-S, LATTICE	J404,4100,4101
40A	WE8-5858-000		1	CORE, FERRITE	
41	FF3-4273-000		1	CABLE, INVERTER CONNECT	J4020,4021
41A	VS1-6318-005		1	CONNECTOR, SNAP TIGHT	J4020

FIGURE & KEY NO.	PART NUMBER	RANK	Q'TY	DESCRIPTION	SERIAL NUMBER / REMARKS
210 - 42	FB5-5551-000		1	SPRING, LEAF	
43	VS1-5057-003		1	CONNECTOR, SNAP TIGHT	J4060
44	FB1-7109-000		2	PULLEY	
45	FB3-2398-020		1	LEVER	
46	FB5-3046-000		1	PLATE, SKEW ADJUSTMENT	
47	FB5-5228-000		2	SPRING, LEAF	
48	FB5-5544-000		1	SPRING, LEAF	
49	FF5-9820-000		1	RAIL, SCANNER, FRONT	
50	FF5-9821-000		1	RAIL, SCANNER, REAR	
51	FH7-7557-000		1	PHOTO-INTERRUPTER	PS400 J4052
52	FS5-9642-000		2	SCREW,STEPPED,M4	
53	FG6-4971-000		1	CABLE, HOME POSITION SENSOR	J4051,4052
53A	WT2-5565-000		2	CLAMP, CABLE	
54	FF3-4267-000		1	CABLE, SCANNER MOTOR	J401,4010
55	FG3-1683-000		1	CABLE, PAPER DETECT SENSOR	J403,406,4030,4060
56	RH2-5191-000		1	CORD, POWER	100V P1
57	FG6-4985-000		1	CABLE, DDI-S POWER SUPPLY	J2,9200
58	FB5-5555-000		2	COVER, BLANKING	
59	FB5-5593-000		1	LABEL,"SERVICE"	
60	FB6-0340-000		1	GUIDE, PAPER	
61	FB6-0344-000		2	RETAINER, GASKET	
62	FF6-0331-000		1	PLATE, BLANKING	
63	FG3-2397-000		1	CABLE, CCD	J407,408,600,601
64	FS6-8478-000		1	LABLE, POWER	100V
65	XA9-0642-000		6	SCREW,RS,M3X6	
66	FB5-5458-000		1	COVER, INLET	120/220/240V
67	FB5-5462-000		1	SHEET, FIXED SUPPORT	
68	FB5-5467-000		3	SPRING, LEAF	
69	FG6-7978-000		1	DDIS PCB ASSEMBLY	
69A	FG3-2398-000		1	CABLE, FLAT	J409,5501

COPYRIGHT ©2002 CANON INC.

FIGURE & KEY NO.	PART NUMBER	RANK	Q'TY	DESCRIPTION	SERIAL NUMBER / REMARKS
210 - 69B	FG3-2399-000		1	CABLE, DDIS POWER SUPPLY	J411,5503
69C	WE8-5989-000		1	CORE, FERRITE	
70	FG3-1680-000		1	CABLE, POWER SUPPLY, LATTICE	J400,4101,9200
70A	WE8-5858-000		2	CORE, FERRITE	
71	FG3-1682-000		1	FUSE PCB ASSEMBLY	100/220/240V
72	FG6-5956-000		1	CABLE, INLET	100V P2 J5602
501	XB1-2300-407		2	SCREW,MACH.,TRUSS HEAD,M3X4	
502	XB3-6400-800		67	SCREW,RS,M4X8	
503	XB6-7300-409		2	SCREW,TP,M3X4	
504	XD2-1100-642		4	RING,E	
505	XD2-1100-642		1	RING,E	
506	XD3-1250-142		1	PIN,SPRING	
507	XB6-2400-508		4	SETSCREW,M4X5	
508	XD2-1100-642		2	RING,E	
509	XB1-2300-609		4	SCREW,MACH.,TRUSS HEAD,M3X6	
510	XB3-6400-800		1	SCREW,RS,M4X8	
511	XB1-2300-609		2	SCREW,MACH.,TRUSS HEAD,M3X6	
512	XB2-7400-609		1	SCREW,W/WASHER,M4X6	
513	XB3-6400-800		1	SCREW,RS,M4X8	
514	XB3-6400-800		19	SCREW,RS,M4X8	
515	XB3-6401-205		1	SCREW,RS,M4X12	
516	XD2-1100-642		2	RING,E	
517	XB3-6400-800		6	SCREW,RS,M4X8	
518	XB1-2300-609		3	SCREW,MACH.,TRUSS HEAD,M3X6	
519	XB2-7400-607		2	SCREW,W/WASHER,M4X6	100/220/240V
520	XB6-7501-007		2	SCREW,TP,M5X10	
521	XB6-7300-607		10	SCREW,TP,M3X6	

FIGURE 420 MIRROR ASSEMBLY 1

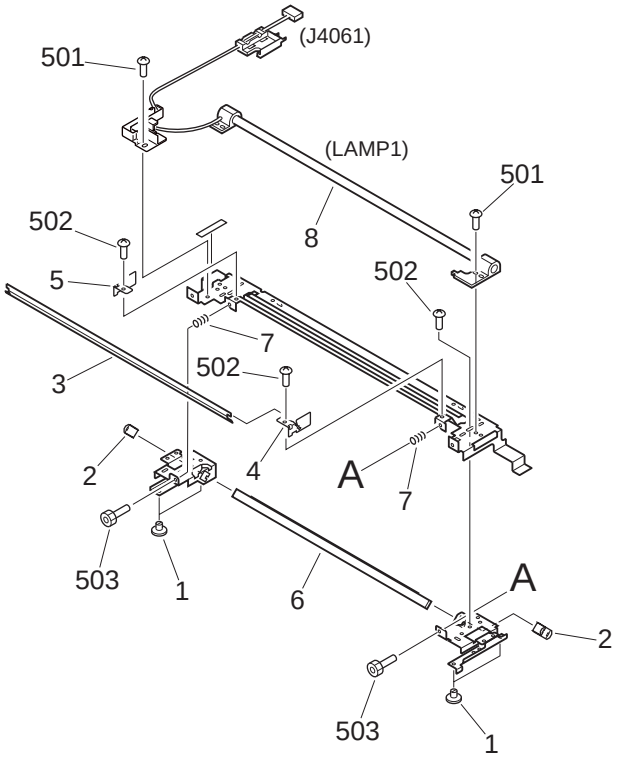

FIGURE & KEY NO.	PART NUMBER	RANK	Q'TY	DESCRIPTION	SERIAL NUMBER / REMARKS
420 -	FG6-6018-000		1	MIRROR ASSEMBLY 1	
1	FB3-2411-000		4	PIN, SLIDE	
2	FB4-5434-000		2	SPRING, LEAF	
3	FB5-5211-000		1	REFLECTOR	
4	FB5-5212-000		1	SIDE REFLECTOR, FRONT	
5	FB5-5213-000		1	SIDE REFLECTOR, REAR	
6	FF6-0333-000		1	MIRROR UNIT 1	
7	FS6-2341-000		2	SPRING, COMPRESSION	
8	FG6-6028-000		1	LAMP, XENON FLUORESCENT	LAMP1 J4061
501	XB2-8300-809		3	SCREW,W/WASHER,M3X8	
502	XB6-7300-409		4	SCREW,TP,M3X4	
503	XB7-1030-169		2	SCREW,ALLEN HEAD,M3X16	

COPYRIGHT ©2002 CANON INC.

FIGURE 430 MIRROR ASSEMBLY 2

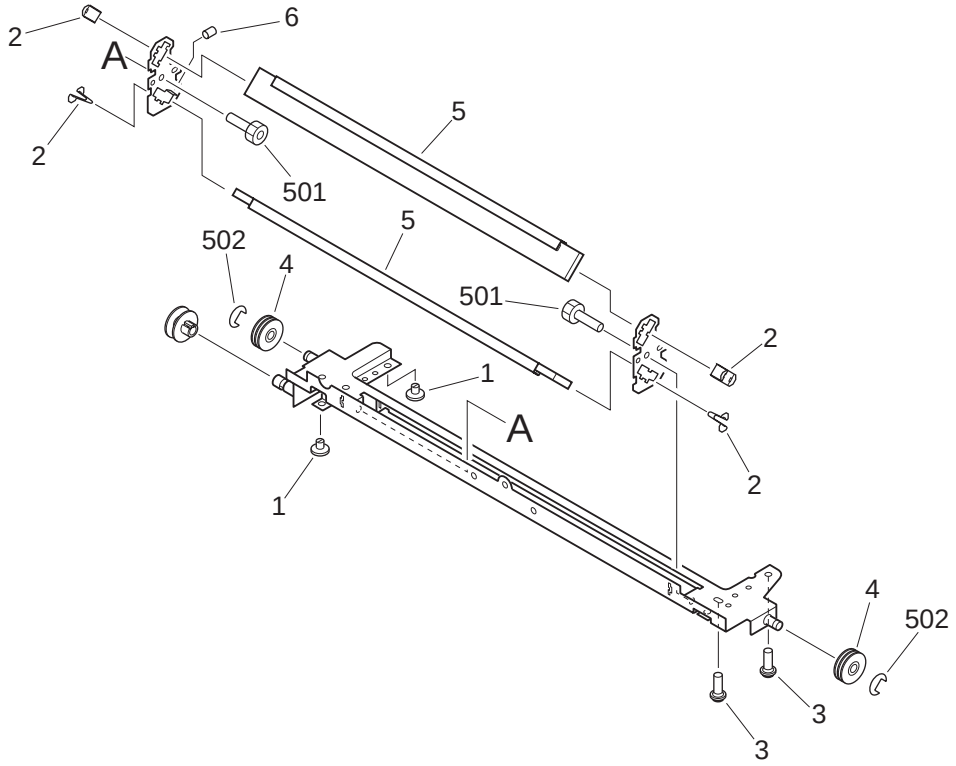

FIGURE & KEY NO.	PART NUMBER	RANK	Q'TY	DESCRIPTION	SERIAL NUMBER / REMARKS
430 -	FG6-6019-000		1	MIRROR ASSEMBLY 2	
1	FB3-2411-000		2	PIN, SLIDE	
2	FB6-0342-000		4	SPRING, LEAF	
3	FB4-5435-000		2	SLIDER B	
4	FB5-5226-000		2	PULLEY	
5	FF6-0334-000		2	MIRROR UNIT 2/3	
6	XA9-0425-000		1	SETSCREW, HEX SOCKET	
501	XB7-1030-069		2	SCREW,ALLEN HEAD,M3X6	
502	XD2-1100-502		2	RING,E	

COPYRIGHT © 2002 CANON INC.

FIGURE 931 READER CONTROLLER PCB ASSEMBLY

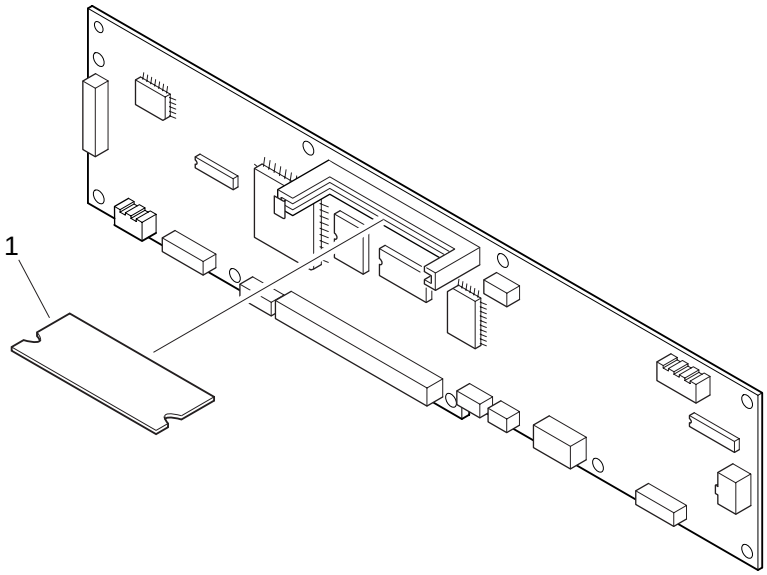

FIGURE & KEY NO.	PART NUMBER	RANK	Q'TY	DESCRIPTION	SERIAL NUMBER / REMARKS
931 -	FG3-1681-000		1	READER CONTROLLER PCB ASSEMBLY	
1	FG3-1736-040		1	DIMM ASSEMBLY	
FU921	VD7-1625-001		1	FUSE, 60V, 5A	
IC404	FH4-6123-000		1	IC, M38871M2-010GP, MCU	
IC405	FH4-5987-000		1	IC, AN2190FHQ, D/A CONVERTER	
IC407	FH4-6102-000		1	IC, UPD82425GD-001-LML	
IC424	FH4-6202-000		1	IC, SLA7044MC	
IC920	FH4-5855-000		1	IC, H8D2760A, PWM CONTROL	
L924	FH3-0932-000		1	COIL, CHOKE	

COPYRIGHT ©2002 CANON INC.

FIGURE B1 LIST OF CONNECTORS

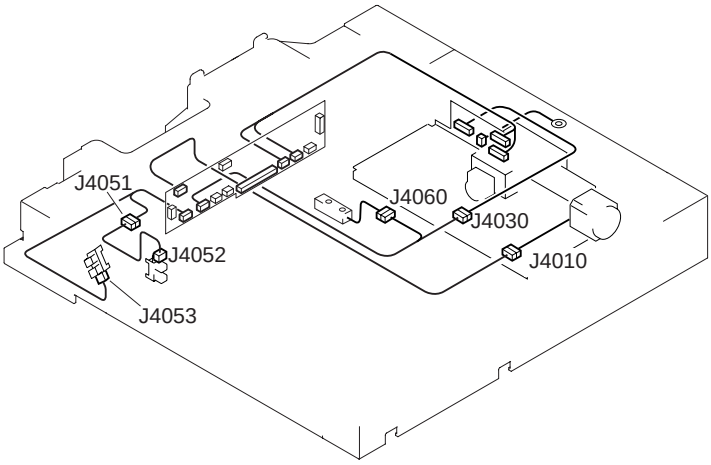

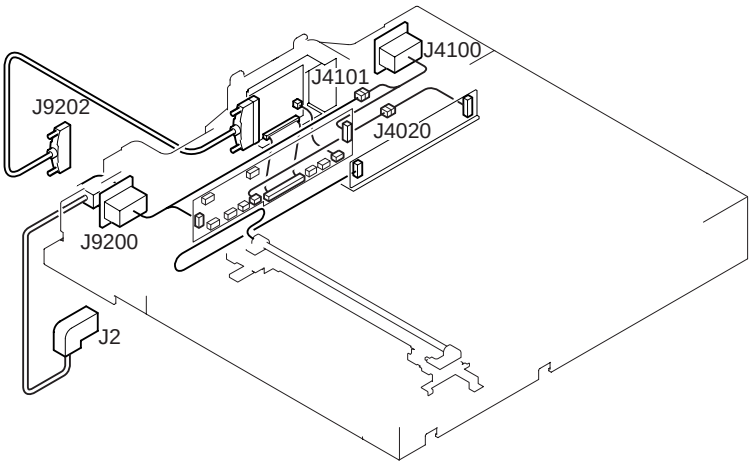

100V

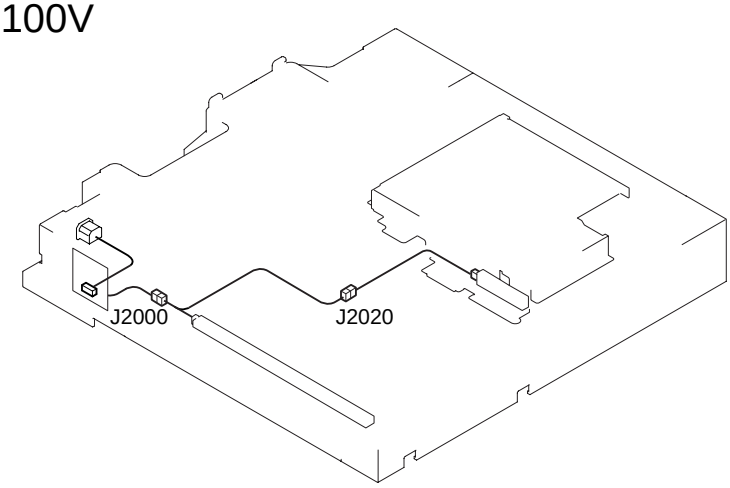

COPYRIGHT ©2002 CANON INC.

FIGURE & KEY NO.	PART NUMBER	RANK	Q'TY	DESCRIPTION	SERIAL NUMBER / REMARKS
B1 -	NPN		RF	LIST OF CONNECTORS	
J2	SYS			TO PRINTER	
	FH2-6856-000		1	HOUSING	
	FH2-5821-000		1	CONNECTOR, 12P, MALE	
	WS3-5264-000		5	SOCKET CONTACT	
J400	PCB			READER CONTROLLER	
	VS3-5083-002		1	CONNECTOR, 2P, FEMALE	
	WS3-5160-000		2	SOCKET CONTACT, 18-24AWG	
J401	PCB			READER CONTROLLER	
	VS1-6302-006		1	CONNECTOR, 6P, MALE	
	WS3-5569-000		6	PIN, CONTACT	
J402	PCB			READER CONTROLLER	
	VS1-6314-004		1	CONNECTOR, 4P, FEMALE	
J403	PCB			READER CONTROLLER	
	VS3-5083-004		1	CONNECTOR, 4P, FEMALE	
	WS3-5160-000		4	SOCKET CONTACT, 18-24AWG	
J404	PCB			READER CONTROLLER	
	VS1-5452-007		1	CONNECTOR, 7P, FEMALE	
J405	PCB			READER CONTROLLER	
	VS1-6314-006		1	CONNECTOR, 6P, FEMALE	
J406	PCB			READER CONTROLLER	
	VS1-6314-003		1	CONNECTOR, 3P, MALE	
J407	PCB			READER CONTROLLER	
	VS1-6314-010		1	CONNECTOR, 10P, FEMALE	
J408	PCB			READER CONTROLLER	
	VS1-6314-005		1	CONNECTOR, 5P, FEMALE	
J409	PCB			READER CONTROLLER	
	VS1-6407-080		1	CONNECTOR, 80P, FEMALE	
J411	PCB			READER CONTROLLER	
	VS1-6302-003		1	CONNECTOR, 3P, FEMALE	

FIGURE & KEY NO.	PART NUMBER	RANK	Q'TY	DESCRIPTION	SERIAL NUMBER / REMARKS
B1 - J411	WS3-5569-000		2	PIN, CONTACT	
J600	PCB			CCD	
	VS1-6313-011		1	CONNECTOR, 11P, FEMALE	
J601	PCB			CCD	
	VS1-6313-004		1	CONNECTOR, 4P, FEMALE	
J602	PCB			CCD	
	VS3-5083-004		1	CONNECTOR, 4P, FEMALE	
	WS3-5160-000		4	SOCKET CONTACT, 18-24AWG	
J603	PCB			CCD	
	VS3-5083-002		1	CONNECTOR, 2P, FEMALE	
	WS3-5160-000		1	SOCKET CONTACT, 18-24AWG	
J2000	PCB			FUSE	100V
	NPN			MIRROR HEATER	100V H4
J2020	NPN			LENS HEATER	100V H5
	NPN			MIRROR HEATER	100V H4
J4010	NPN			OPTICAL MOTOR	M400
	VS1-6302-006		1	CONNECTOR, 6P, MALE	
	WS3-5569-000		6	PIN, CONTACT	
J4020	VS1-6314-005		2	CONNECTOR, 5P, FEMALE	
	VS1-6318-005		1	CONNECTOR, SNAP TIGHT	
J4021	PCB			LAMP INVERTER	
	VS1-6314-004		1	CONNECTOR, 4P, FEMALE	
J4030	VS1-5729-004		1	CONNECTOR, 4P, MALE	
	VS3-5083-004		1	CONNECTOR, 4P, FEMALE	
	WS3-5301-000		4	PIN CONTACT	
	WS3-5160-000		4	SOCKET CONTACT, 18-24AWG	
J4051	VS1-6320-003		2	CONNECTOR, 3P, MALE	
	VS1-5057-003		1	CONNECTOR, SNAP TIGHT	
J4052	NPN			OPTICAL HP SENSOR	PS400
	VS1-6321-003		1	CONNECTOR, 3P, FEMALE	

COPYRIGHT ©2002 CANON INC.

FIGURE & KEY NO.	PART NUMBER	RANK	Q'TY	DESCRIPTION	SERIAL NUMBER / REMARKS
B1 - J4053	NPN			COPYBOARD COVER OPEN SENSOR	PS401
	VS1-6321-003		1	CONNECTOR, 3P, FEMALE	
J4060	NPN			PAPER DETECT SENSOR	SD1
	VS1-6321-003		1	CONNECTOR, 3P, FEMALE	
	VS1-5057-003		1	CONNECTOR, SNAP TIGHT	
J4061	PCB			LAMP INVERTER	
	NPN			SCANNING LAMP	LAMP1
J4100	SYS			ADF-S	
	FH2-6480-000		1	CONNECTOR, FEMALE	
	VS1-5452-007		1	CONNECTOR, 7P, FEMALE	
	WS3-5596-000		3	PIN CONTACT, 18-24AWG	
J4101	VS1-5729-002		1	CONNECTOR, 2P, MALE	
	VS3-5083-002		1	CONNECTOR, 2P, FEMALE	
	WS3-5301-000		2	PIN CONTACT	
	WS3-5160-000		2	SOCKET CONTACT, 18-24AWG	
J5501	PCB			DIFFERENTIAL	
	VS1-6407-080		1	CONNECTOR, 80P, FEMALE	
J5502	PCB			DIFFERENTIAL	
	FH2-6756-000		1	CABLE, DDI-S INTERFACE	
J5503	PCB			DIFFERENTIAL	
	VS1-6302-003		2	CONNECTOR, 3P, FEMALE	
	WS3-5569-000		4	PIN, CONTACT	
J5602	PCB			FUSE	100V
	VS3-5083-003		1	CONNECTOR, 3P, FEMALE	100V
	WS3-5160-000		2	SOCKET CONTACT, 18-24AWG	100V
J9200	FH2-6856-000		1	HOUSING	
	FH2-5821-000		1	CONNECTOR, 12P, MALE	
	FH2-6855-000		1	CONNECTOR, 12P, FEMALE	
	FH2-5825-000		5	PIN CONTACT, 16-20AWG	
	WS3-5264-000		5	SOCKET CONTACT	

FIGURE & KEY NO.	PART NUMBER	RANK	Q'TY	DESCRIPTION	SERIAL NUMBER / REMARKS
B1 - J9202	SYS			TO PRINTER	
	FH2-6756-000		1	CABLE, DDI-S INTERFACE	

COPYRIGHT ©2002 CANON INC.

FIGURE B2 LIST OF ELECTRIC PARTS

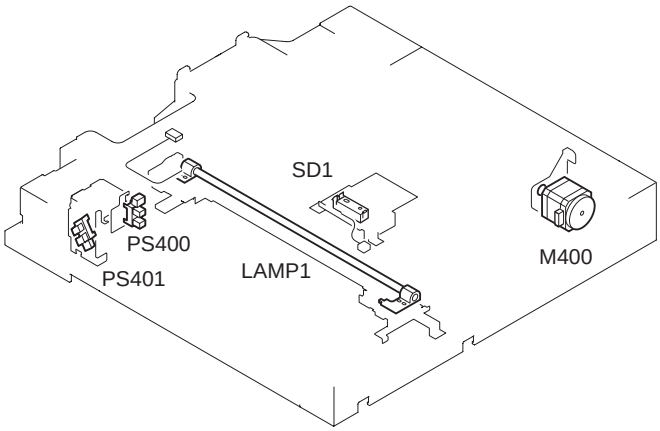

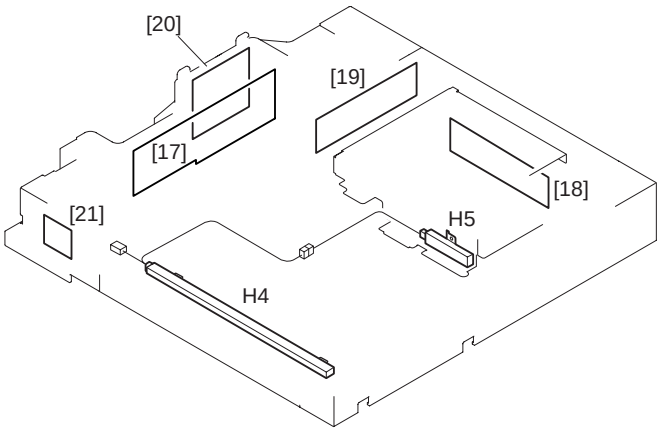

COPYRIGHT ©2002 CANON INC.

FIGURE & KEY NO.	PART NUMBER	RANK	Q'TY	DESCRIPTION	SERIAL NUMBER / REMARKS
B2 -	NPN		RF	LIST OF ELECTRIC PARTS	
17	FG3-1681-000		1	READER CONTROLLER PCB ASSEMBLY	
18	FG6-7982-000		1	CCD UNIT	
19	FH3-7211-020		1	LAMP INVERTER PCB ASSEMBLY	
20	FG6-7978-000		1	DDIS PCB ASSEMBLY	
21	FG3-1682-000		1	FUSE PCB ASSEMBLY	100/220/240V
H4	FH7-4665-000		1	HEATER, PLATE	100V
H5	FH7-4666-000		1	HEATER, PLATE	100V
LAMP1	FG6-6028-000		1	LAMP, XENON FLUORESCENT	
M400	FH6-1856-000		1	MOTOR, STEPPING	
PS400	FH7-7557-000		1	PHOTO-INTERRUPTER	
PS401	FH7-7557-000		1	PHOTO-INTERRUPTER	
SD1	FH7-7550-000		1	PAPER DETECT SENSOR UNIT	

iR2200i/2800i/3300i

iR2200i

F14-0115	100V	50/60Hz	MJD00001 -
F14-0125	220V	50Hz	QSZ00001 -
F14-0145	220V	50Hz	RSD00001 -
F14-0155	240V	50Hz	QEV00001 -
F14-0165	240V	50Hz	REU00001 -
F14-0175	220V	50Hz	SDT00001 -
F14-0185	220V	50Hz	TEG00001 -
F14-0195	220V	50Hz	UJB00001 -

iR2800i

F14-3415	100V	50/60Hz	MJF00001 -

iR3300i

F14-0215	100V	50/60Hz	MJE00001 -
F14-0235	120V	60Hz	MQC00001 -
F14-0225	220V	50Hz	RSC00001 -
F14-0245	220V	50Hz	RSE00001 -
F14-0255	240V	50Hz	QEW00001 -
F14-0265	240V	50Hz	REV00001 -
F14-0275	220V	50Hz	SDU00001 -
F14-0285	220V	50Hz	TEH00001 -
F14-0295	220V	50Hz	UJC00001 -

COPYRIGHT © 2002 CANON INC.

CONTENTS

A. ASSEMBLY LOCATION DIAGRAM

100. EXTERNAL COVERS, PANELS, ETC.
101. MACHINE FRONT PLATE
102. INTERNAL COMPONENTS 1
103. INTERNAL COMPONENTS 2
104. INTERNAL COMPONENTS 3
105. INTERNAL COMPONENTS 4
106. INTERNAL COMPONENTS 5
107. MACHINE REAR PLATE
110. POWER CORD TERMINAL ASSEMBLY(100/120V)
111. POWER CORD TERMINAL ASSEMBLY(220/240V)
120. RIGHT DOOR ASSEMBLY
130. CONTROL PANEL ASSEMBLY
190. DEVELOPING FAN ASSEMBLY
191. MACHINE EXHAUST FAN ASSEMBLY

250. MAIN DRIVE ASSEMBLY
260. PAPER PICK-UP DRIVE ASSEMBLY
261. DUPLEXING DRIVE ASSEMBLY
280. FIXING FEEDER DRIVE ASSEMBLY

300. CASSETTE
310. PAPER PICK-UP MOUNT ASSEMBLY
315. MULTI FEEDER TRAY ASSEMBLY
320. REGISTRATION FRONT GUIDE ASSEMBLY
330. PAPER FEEDER ASSEMBLY
350. PAPER DELIVERY ASSEMBLY
351. LEFT VERTICAL PATH ASSEMBLY
360. DUPLEXING FEEDER ASSEMBLY

460. SCANNER ASSEMBLY

500. DRUM CARTRIDGE ASSEMBLY

640. DEVELOPING ASSEMBLY

810. FIXING ASSEMBLY

900. CONTROLLER BOX ASSEMBLY
910. HV POWER SUPPLY PCB ASSEMBLY
920. CONTROL PANEL CPU PCB ASSEMBLY
921. CONTROL PANEL INVERTER PCB ASSEMBLY
930. DC CONTROLLER PCB ASSEMBLY
940. PAPER PICK-UP PCB ASSEMBLY
950. RESOLUTION CONVERSION PCB ASSEMBLY

B1. LIST OF CONNECTORS
B2. LIST OF MOTORS
B3. LIST OF FAN MOTORS
B4. LIST OF SENSORS
B5. LIST OF CLUTCHES, AND OTHERS
B6. LIST OF HEATERS, LAMPS, ETC.
B7. LIST OF PCBS

D2. NUMERICAL INDEX (iR2200i/2800i/3300i)

COPYRIGHT ©2002 CANON INC.

FIGURE A ASSEMBLY LOCATION DIAGRAM (1/3)

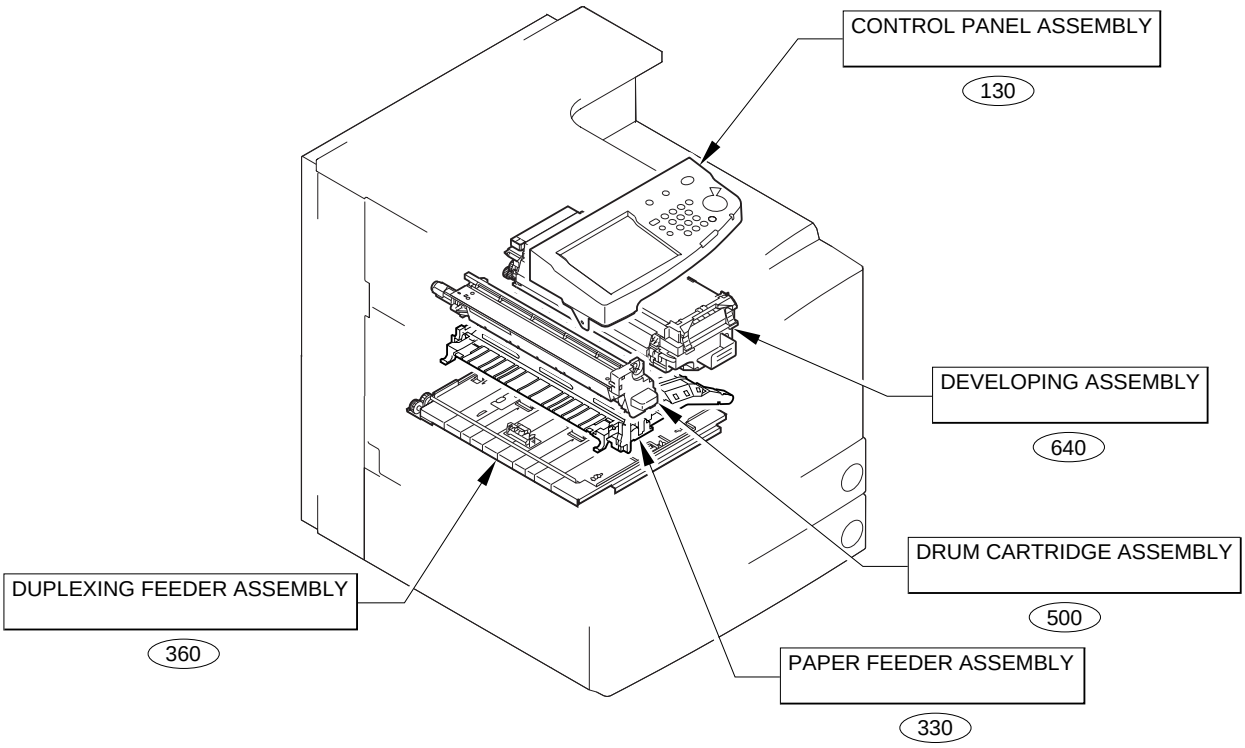

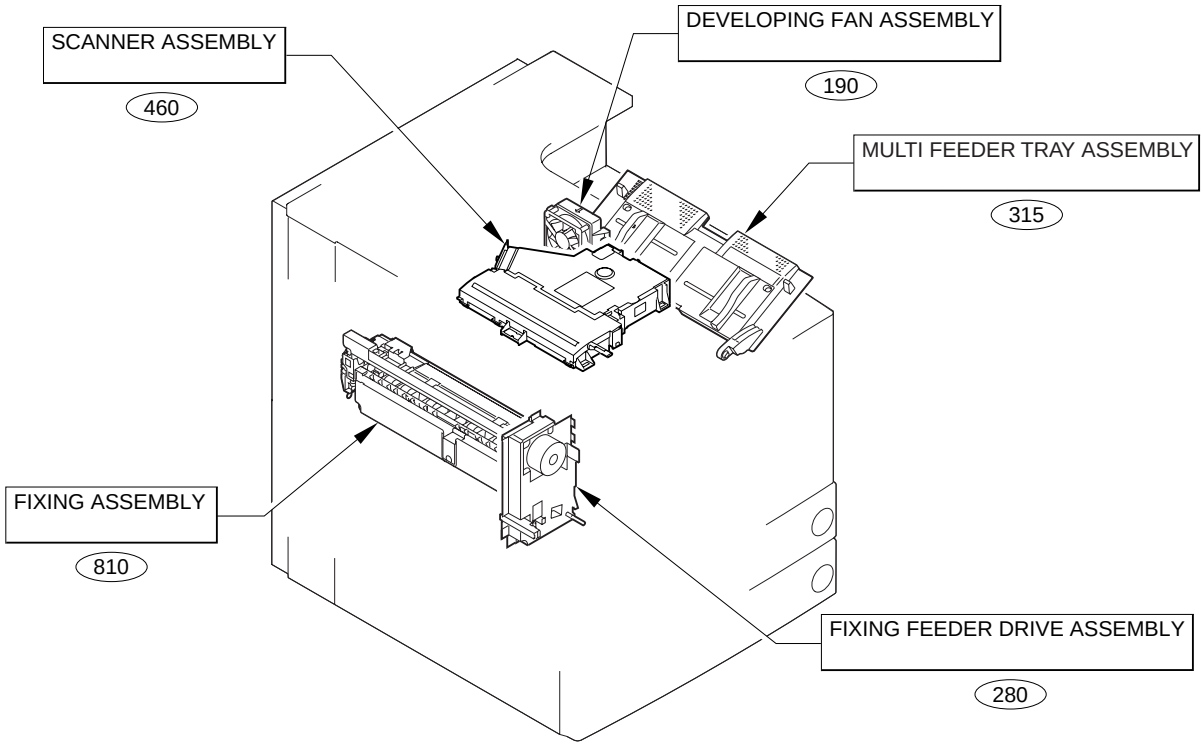

FIGURE A ASSEMBLY LOCATION DIAGRAM (2/3)

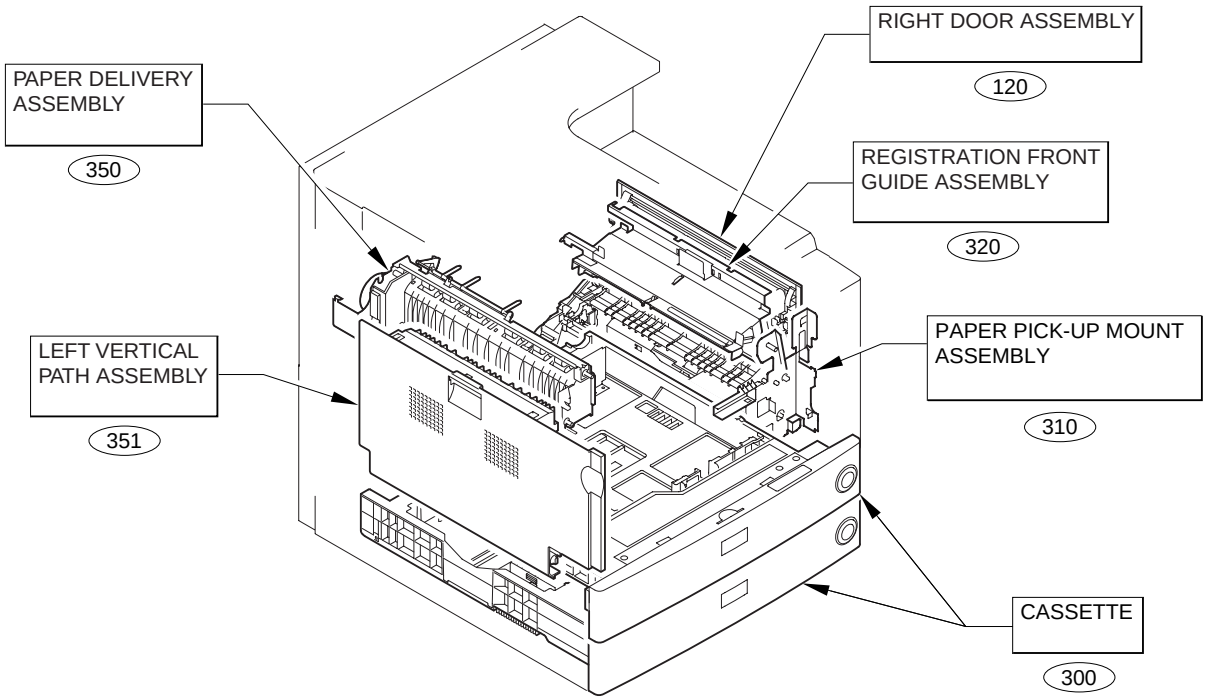

COPYRIGHT ©2002 CANON INC.

FIGURE A ASSEMBLY LOCATION DIAGRAM (3/3)

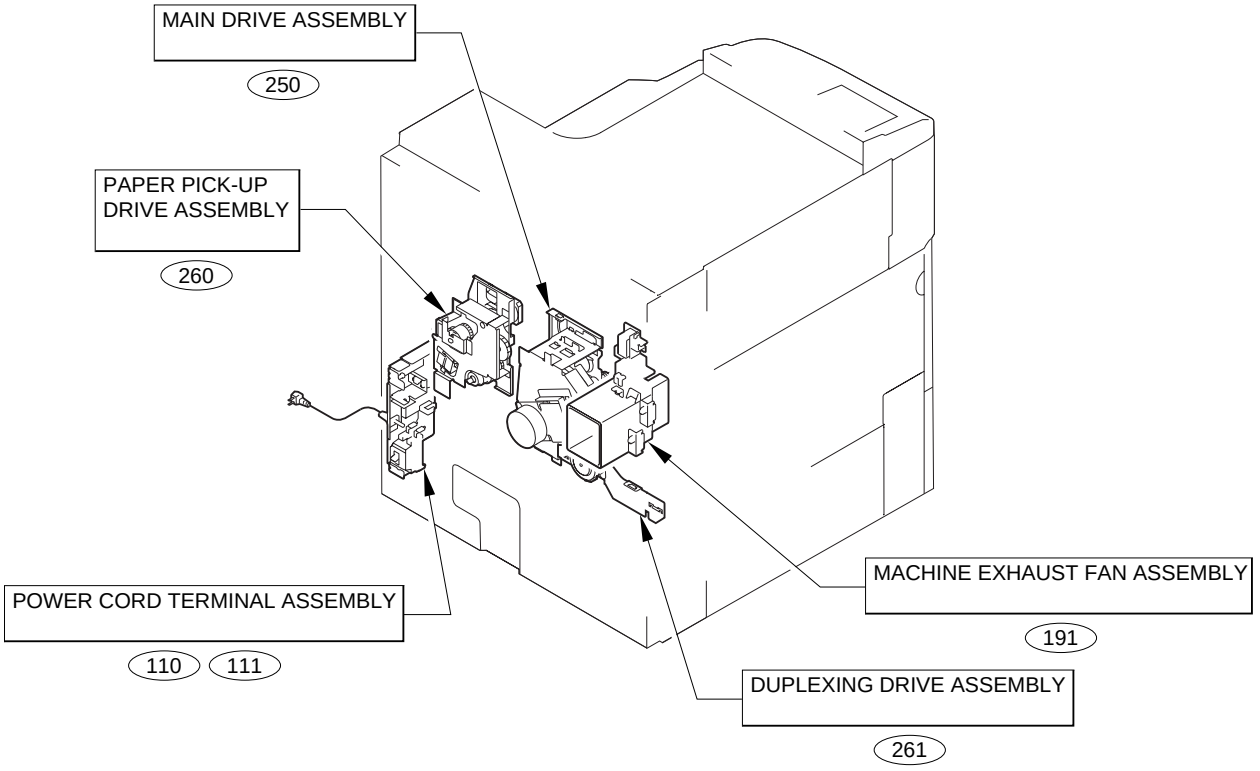

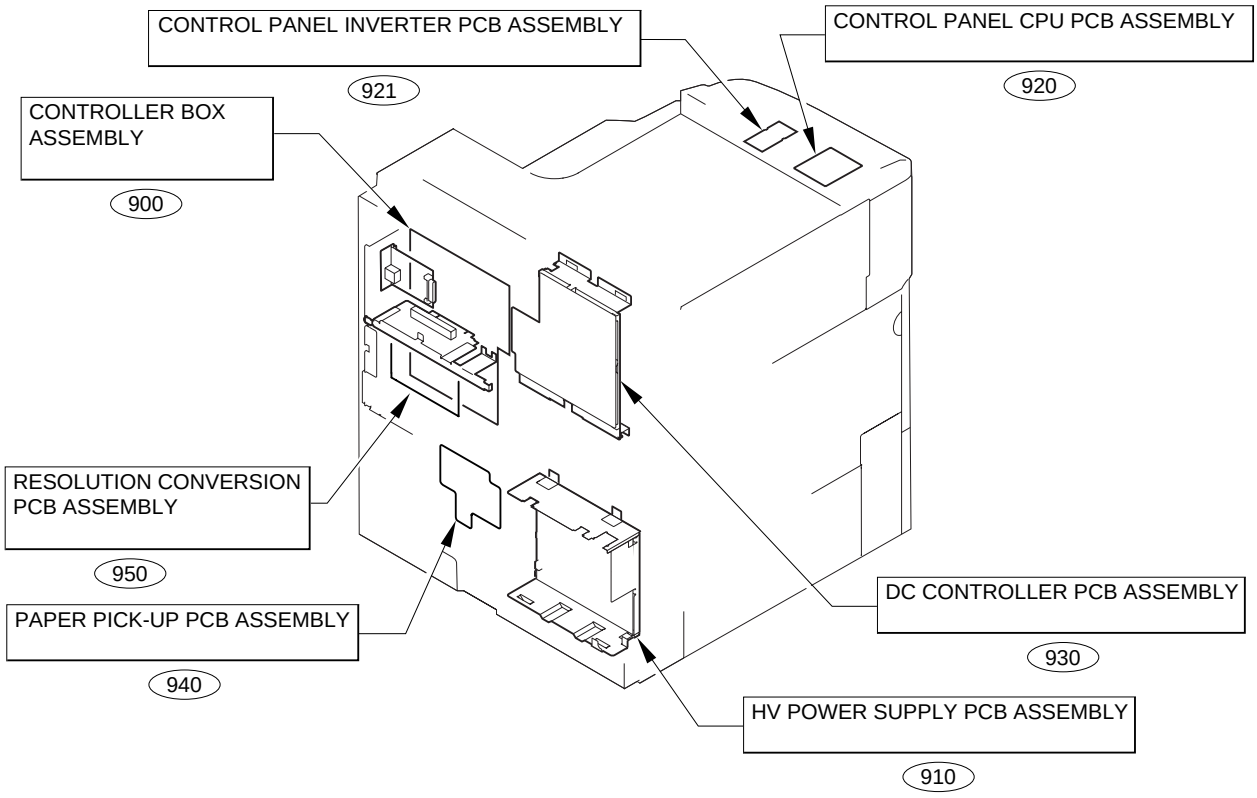

FIGURE 100 EXTERNAL COVERS, PANELS, ETC.

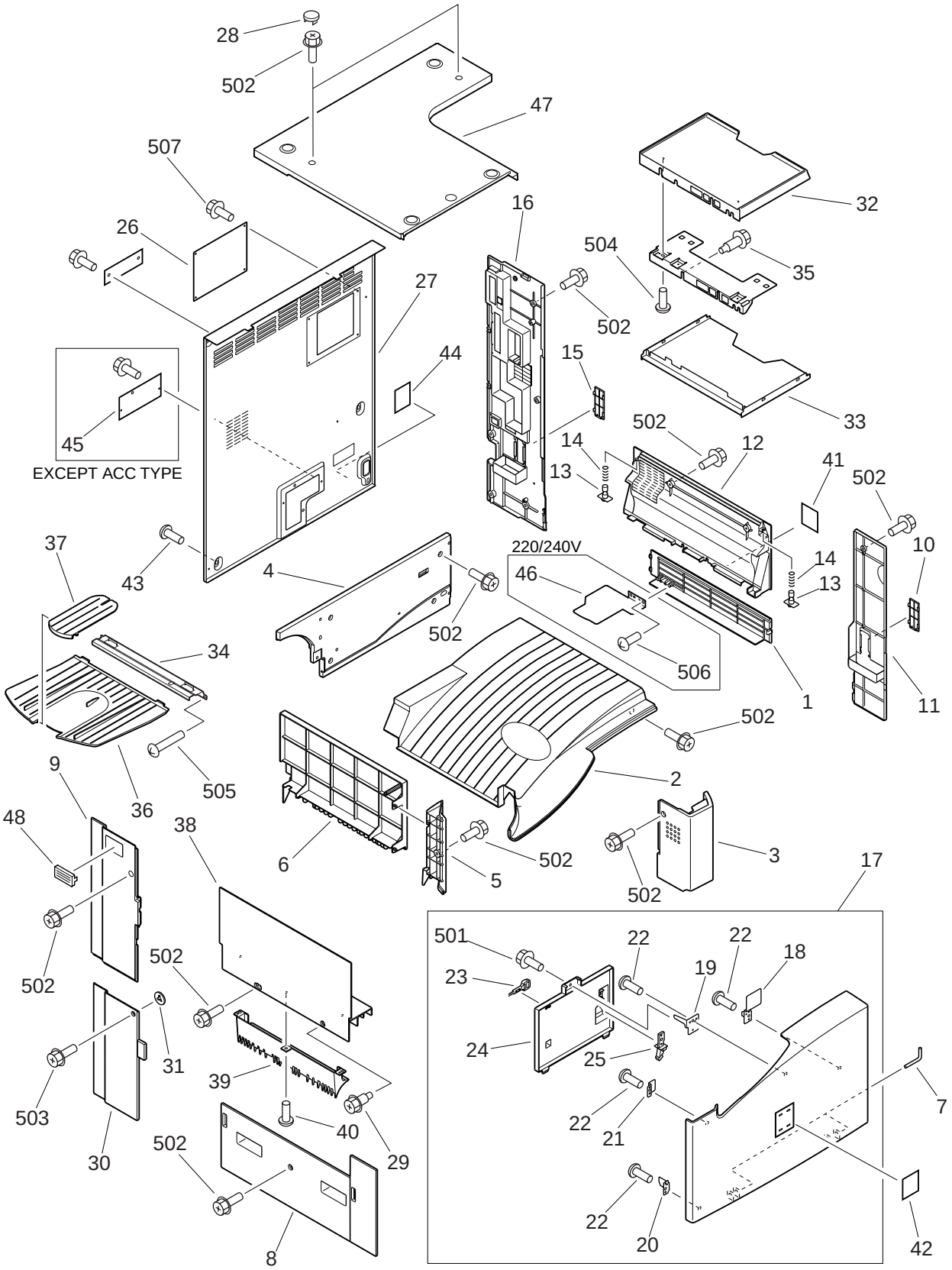

COPYRIGHT © 2002 CANON INC.

FIGURE & KEY NO.	PART NUMBER	RANK	Q'TY	DESCRIPTION	SERIAL NUMBER / REMARKS
100 -	NPN		RF	EXTERNAL COVERS, PANELS, ETC	
1	FB5-4769-000		1	PANEL, RIGHT LOWER	
2	FB5-5055-000		1	PANEL, PRINTER, UPPER	
3	FB5-5058-000		1	PANEL, SUPPORT, LEFT	
4	FB5-5063-000		1	PANEL, INTERNAL, REAR	
5	FB5-5182-000		1	PANEL, LEFT SUPPORT, REAR	
6	FB5-5186-030		1	PANEL, PAPER DELIVERY	
7	FB3-2224-000		2	PIN, HINGE	
8	FB5-5266-020		1	LEFT PANEL, MIDDLE	
9	FB5-5267-000		1	LEFT PANEL, REAR	
10	FB5-4731-000		1	PLATE, BLANKING	
11	FB5-4741-000		1	RIGHT PANEL, FRONT	
12	FB5-4767-000		1	RIGHT PANEL, MIDDLE	
13	FB5-4772-000		2	LINK, TRAY	
14	FS7-2404-000		2	SPRING, COMPRESSION	
15	FB5-4731-000		1	PLATE, BLANKING	
16	FB5-4768-000		1	RIGHT PANEL, REAR	
17	FG6-5736-000		1	PANEL, FRONT	
18	FB5-5053-000		1	PLATE, SWITCH SHAFT PRESSURE	
19	FB5-5067-000		1	PLATE, SHUTTER LEVER PRESSURE	
20	FB5-5069-000		1	PLATE, INTERLOCK	
21	FB5-5070-000		1	PLATE, CATCH, LEFT	
22	XA9-0605-000		4	SCREW,P,M4X8	
23	FB4-5380-000		1	BRUSH, CLEANING	
24	FB5-5052-000		1	CASE, SERVICE	
25	FF6-0074-020		1	MIRROR CLEANING TOOL	
26	FB1-7157-000		1	COVER, BLANKING, REAR	
27	FB5-5061-000		1	PANEL, REAR	
28	FB6-2852-000		2	COVER, RUBBER	
29	FS5-9661-000		1	SCREW,STEPPED,RS,M4	

FIGURE & KEY NO.	PART NUMBER	RANK	Q'TY	DESCRIPTION	SERIAL NUMBER / REMARKS
100 - 30	FB5-5057-000		1	PANEL, WASTE TONER	
31	XD9-0206-000		1	SPACER, SCREW RETAINER	
32	FB1-7737-000		1	TABLE, DOCUMENT, UPPER	
33	FB1-7738-000		1	TABLE, DOCUMENT, LOWER	
34	FB5-9806-000		1	SUPPORT, COPY TRAY	
35	XA9-1301-000		2	SCREW, RS STEPPED, M4	
36	FB4-5933-000		1	TRAY, DOCUMENT	
37	FB5-5143-000		1	TRAY, PAPER DELIVERY AUXILIARY	
38	FB5-4859-000		1	PANEL, PAPER DELIVERY	
39	FB5-4860-000		1	GUIDE, PAPER DELIVERY	
40	XA9-0605-000		3	SCREW,P,M4X8	
41	RS6-8382-000		1	LABEL, "WARNING LASER"	
42	FB6-4433-000		1	EMBLEM	IR2200I
	FB6-4434-000		1	EMBLEM	IR2800I
	FB6-4435-000		1	EMBLEM	IR3300I
	FB6-4436-000		1	EMBLEM	IMAGE RUNNER 3300I
43	XA9-0266-000		7	SCREW,W/WASHER,M4X8	
44	RS6-8382-000		1	LABEL, "WARNING LASER"	
45	FB5-5068-000		1	PLATE, BLANKING	EXCEPT ACC TYPE
46	FB3-2381-000		1	COVER, PAPER PICK-UP, LOWER	220/240V
47	FB5-5066-000		1	PANEL, UPPER	
48	FH2-5824-000		1	COVER, CONNECTOR, 1	
501	XB3-6400-805		1	SCREW,RS,M4X8	
502	XB3-6400-800		AR	SCREW,RS,M4X8	
503	XB3-6400-800		1	SCREW,RS,M4X8	
504	XB4-7300-609		2	SCREW,TAPPING,TRUSS HEAD,M3X6	
505	XB6-7401-206		2	SCREW,TP,M4X12	
506	XB4-7400-809		2	SCREW,TAPPING,TRUSS HEAD,M4X8	220/240V
507	XB3-6400-800		7	SCREW,RS,M4X8	

COPYRIGHT ©2002 CANON INC.

FIGURE 101 MACHINE FRONT PLATE

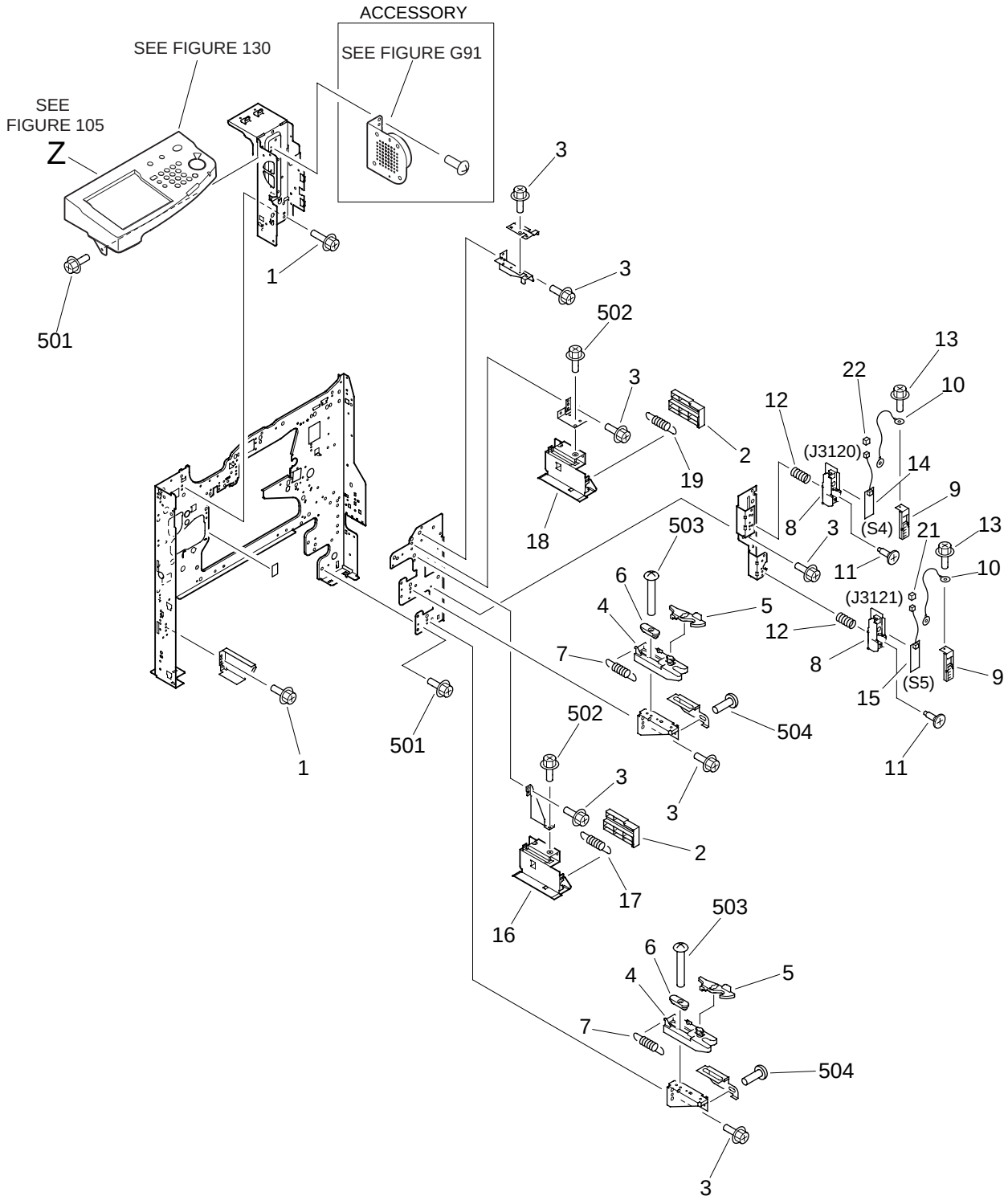

COPYRIGHT © 2002 CANON INC.

FIGURE & KEY NO.	PART NUMBER	RANK	Q'TY	DESCRIPTION	SERIAL NUMBER / REMARKS
101 -	NPN		RF	MACHINE FRONT PLATE	
1	XA9-0721-000		AR	SCREW,RS,M4X10	
2	FB5-3928-000		2	COVER, RIGHT RAIL	
3	XA9-0626-000		9	SCREW,RS,M3X6	
4	FB3-2937-000		2	BLOCK, CASSETTE STOP	
5	FB5-1471-000		2	LEVER, CLICK	
6	FB5-4762-000		2	GUIDE, CASSETTE CLICK	
7	FS7-2287-000		2	SPRING, TENSION	
8	FB3-2947-000		2	HOLDER, PCB	
9	FF6-0112-000		2	COVER, SIZE SENSOR PCB	
10	FF3-1171-000		2	CABLE, GROUNDING	
11	FS5-9397-000		2	SCREW,STEPPED,M4	
12	FS6-2311-000		2	SPRING, COMPRESSION	
13	XA9-0626-000		4	SCREW,RS,M3X6	
14	FG3-1617-000		1	UPPER CASSETTE SIZE PCB ASS'Y	S4 J3120
15	FG3-1618-000		1	LOWER CASSETTE SIZE PCB ASS'Y	S5 J3121
16	FF6-0087-000		1	RAIL, RIGHT, LOWER	
17	FS7-2288-000		1	SPRING, TENSION	
18	FF6-0096-000		1	RAIL, RIGHT, UPPER	
19	FS7-2288-000		1	SPRING, TENSION	
21	VS1-5057-006		1	CONNECTOR, SNAP TIGHT	J3121
22	VS1-5057-007		1	CONNECTOR, SNAP TIGHT	J3120
501	XB3-6400-800		AR	SCREW,RS,M4X8	
502	XB3-6400-805		2	SCREW,RS,M4X8	
503	XB1-2301-009		2	SCREW,MACH.,TRUSS HEAD,M3X10	
504	XB6-7400-609		2	SCREW,TP,M4X6	

FIGURE 102 INTERNAL COMPONENTS 1

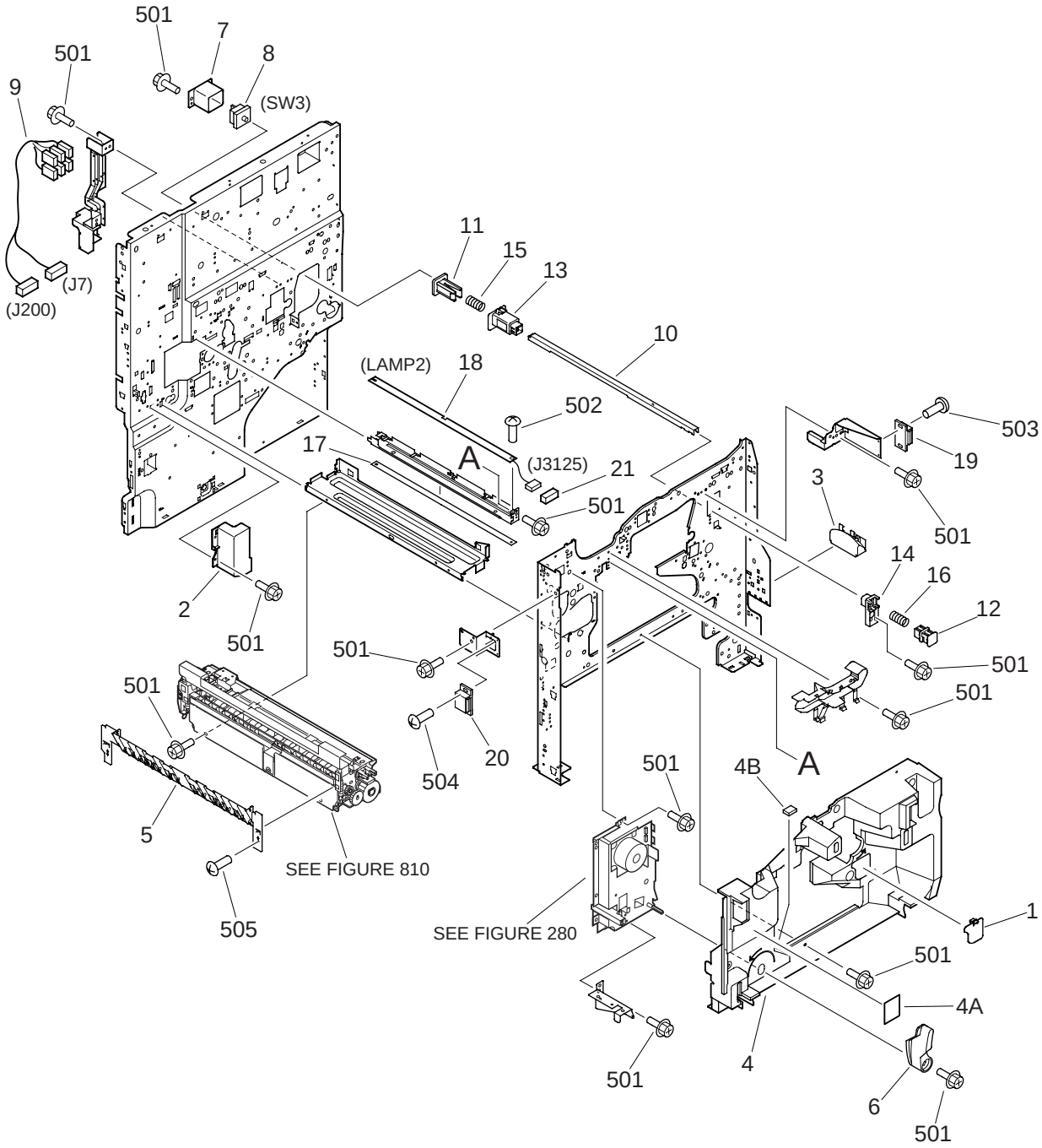

COPYRIGHT ©2002 CANON INC.

FIGURE & KEY NO.	PART NUMBER	RANK	Q'TY	DESCRIPTION	SERIAL NUMBER / REMARKS
102 -	NPN		RF	INTERNAL COMPONENTS 1	
1	FB5-5144-000		1	COVER, AUXILIARY	
2	FB5-5155-000		1	COVER, FIXING CONNECTOR	
3	FB5-5185-000		1	HANDLE, RIGHT FRONT	
4	FF6-0107-000		1	COVER, INTERNAL	
4A	FB5-0281-000		1	LABEL, "CAUTION LASER"	
4B	FB5-4839-000		1	DAMPER, PAPER FEED	
5	FF6-0138-000		1	GUIDE, PAPER DELIVERY	
6	FG6-0561-000		1	FEEDER ENGAGEMENT HANDLE UNIT	
7	FB4-3061-000		1	MOUNT, DOOR SWITCH	
8	WC8-5178-000		1	SWITCH, INTERLOCK	SW3
9	FG3-1602-000		1	CABLE, DOOR SWITCH, AC	J7,200
10	FB4-3062-000		1	SHAFT, DOOR SWITCH	
11	FB4-3063-000		1	BLOCK, SWITCH PRESSURE	
12	FB4-3064-000		1	BLOCK, SHAFT PRESSURE	
13	FB4-3065-000		1	HOLDER, DOOR SWITCH, REAR	
14	FB4-3066-000		1	HOLDER, DOOR SWITCH, FRONT	
15	FS6-2784-000		1	SPRING, COMPRESSION	
16	FS7-2411-000		1	SPRING, COMPRESSION	
17	FB3-2765-000		1	FILTER, PRECONDITION. EXPOSURE	
18	FG5-6297-000		1	PRECONDITIONING LAMP PCB UNIT	LAMP2 J3125
19	XZ9-0527-000		1	MAGNET CATCH	
20	XZ9-0526-000		1	MAGNET CATCH	
21	VS1-5057-002		1	CONNECTOR, SNAP TIGHT	J3125
501	XB3-6400-800		AR	SCREW,RS,M4X8	
502	XB1-2300-609		1	SCREW,MACH.,TRUSS HEAD,M3X6	
503	XB2-8300-807		2	SCREW,W/WASHER,M3X8	
504	XB2-8300-807		2	SCREW,W/WASHER,M3X8	
505	XB6-7300-605		1	SCREW,TP,M3X6	

FIGURE 103 INTERNAL COMPONENTS 2

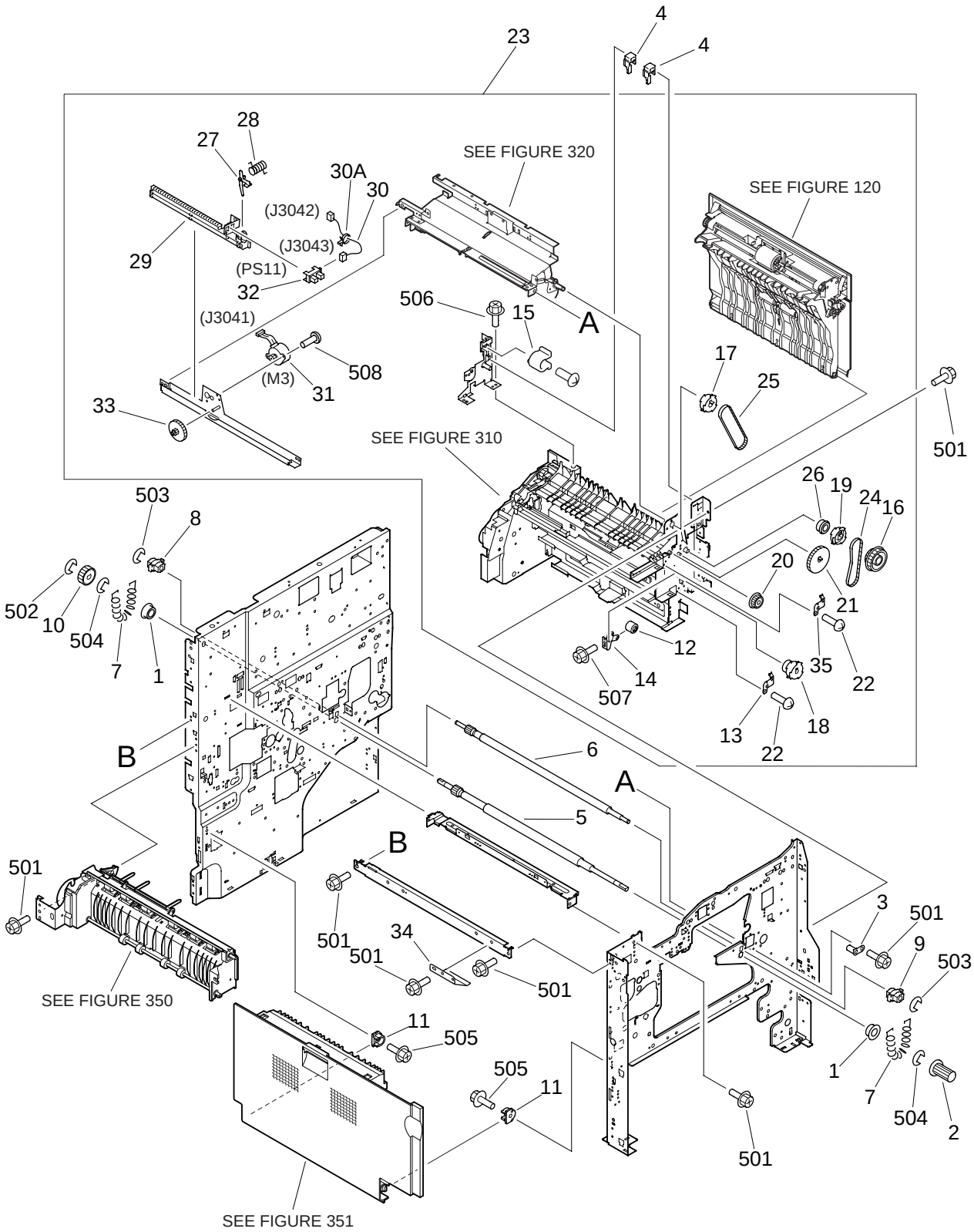

COPYRIGHT ©2002 CANON INC.

FIGURE & KEY NO.	PART NUMBER	RANK	Q'TY	DESCRIPTION	SERIAL NUMBER / REMARKS
103 -	NPN		RF	INTERNAL COMPONENTS 2	
1	FA1-0056-000		2	BUSHING	
2	FB1-7214-000		1	KNOB	
3	FB3-2214-000		1	PIN, POSITIONING	
4	FB3-2829-000		2	BLOCK, MULTI FEED TRAY, STOP	
5	FF6-0086-000		1	ROLLER, REGISTRATION, LOWER	
6	FF6-0097-000		1	ROLLER, REGISTRATION, UPPER	
7	FS2-2783-000		2	SPRING, TENSION	
8	FS5-1261-000		1	BUSHING, REGISTRATION, UPPER	
9	FS5-1944-000		1	BUSHING	
10	FS7-0738-000		1	GEAR, 29T	
11	FB5-5175-000		2	BUSHING, LEFT VERTICAL PATH	
12	FB5-4726-000		1	ROLLER, BELT ADJUSTING	
13	FB5-4727-000		1	SPRING, LEAF, GROUNDING	
14	FB5-5289-000		1	HOLDER, ROLLER	
15	FS5-1589-000		1	BUSHING	
16	FS5-3821-000		1	PULLEY, 40T/GEAR, 16T	
17	FS5-3822-000		1	PULLEY, 40T	
18	FS5-3823-000		1	PULLEY, 40T	
19	FS5-3831-000		1	PULLEY, 40T	
20	FS6-0572-000		1	GEAR, 16T	
21	FS7-0760-000		1	GEAR, 38T	
22	XA9-0591-000		2	SCREW,M3X8	
23	FG6-5644-100		1	PAPER PICK-UP ASSEMBLY	
24	XF2-3110-840		1	BELT, TIMING	
25	XF2-3113-140		1	BELT, TIMING	
26	XG9-0250-000		1	BEARING, BALL	
27	FB5-9801-000		1	LINK, SIDE REGISTRATION	
28	FB3-2996-000		1	SPRING, TORSION	
29	FB5-4720-000		1	BLOCK, SIDE REGIST. SENSOR	

FIGURE & KEY NO.	PART NUMBER	RANK	Q'TY	DESCRIPTION	SERIAL NUMBER / REMARKS
103 - 30	FF3-4174-000		1	CABLE, SIDE REGIST. SENSOR	J3042,3043
30A	WT2-5565-000		1	CLAMP, CABLE	
31	FH6-1253-000		1	MOTOR, STEPPING, DC24V	M3 J3041
32	FH7-7462-000		1	PHOTO-INTERRUPTER	PS11 J3043
33	FS7-0750-000		1	GEAR, 56T/14T	
34	FB5-9789-000		1	SPRING, LEAF	
35	FB5-9809-000		1	SPRING, LEAF	
501	XB3-6400-800		AR	SCREW,RS,M4X8	
502	XD2-1100-402		1	RING,E	
503	XD2-1100-502		2	RING,E	
504	XD2-1100-642		2	RING,E	
505	XB3-7400-809		2	SCREW,RS TOOTHED LOCK,M4X8	
506	XB3-6300-609		1	SCREW,RS,M3X6	
507	XB3-6300-800		11	SCREW,RS,M3X8	
508	XB1-2300-609		2	SCREW,MACH.,TRUSS HEAD,M3X6	

COPYRIGHT ©2002 CANON INC.

FIGURE 104 INTERNAL COMPONENTS 3

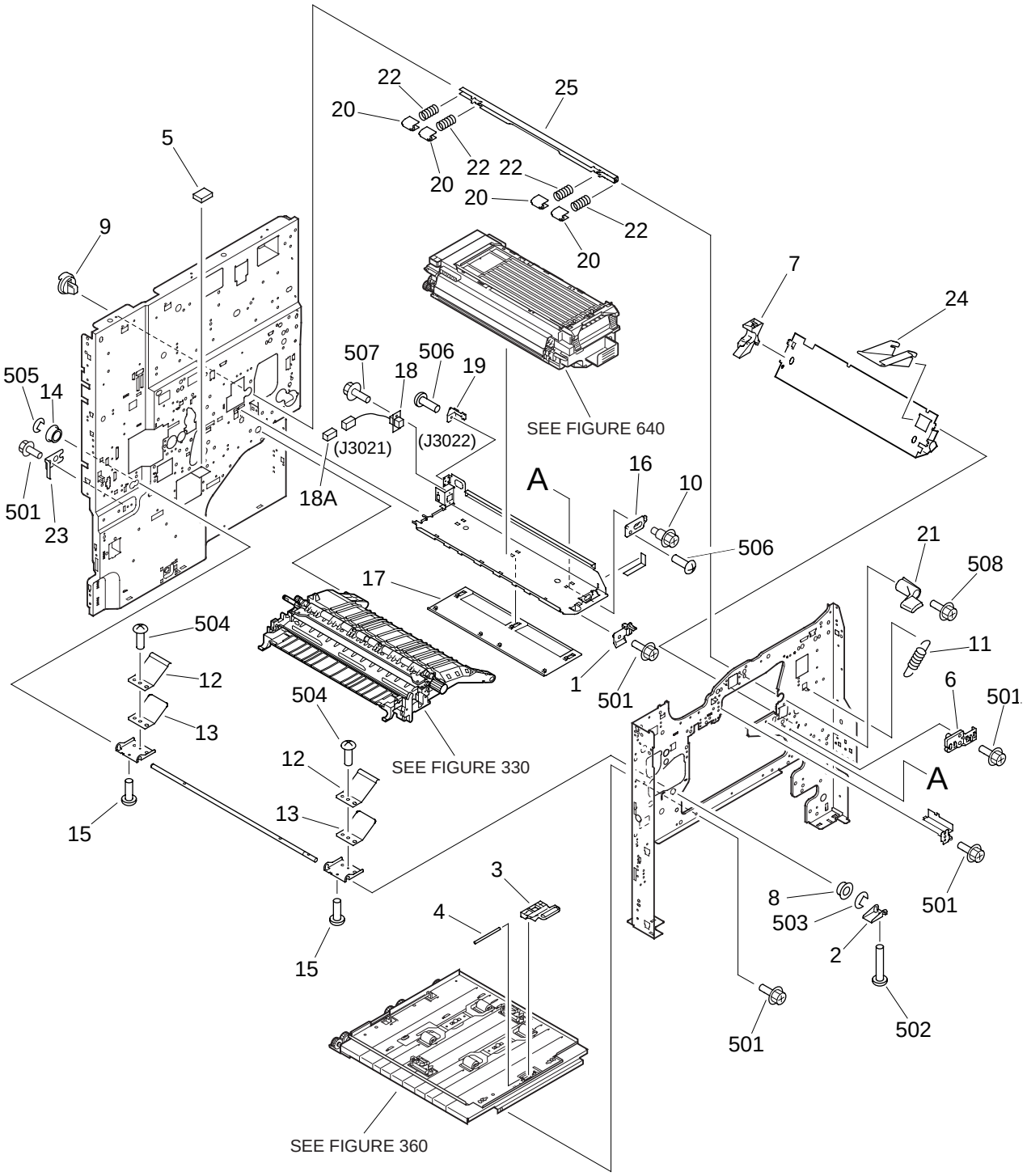

COPYRIGHT ©2002 CANON INC.

FIGURE & KEY NO.	PART NUMBER	RANK	Q'TY	DESCRIPTION	SERIAL NUMBER / REMARKS
104 -	NPN		RF	INTERNAL COMPONENTS 3	
1	FB3-2206-000		1	PLATE, STOP DEVELOPING	
2	FB5-4819-000		1	ARM, PRESSURE PLATE	
3	FB4-2943-000		1	HANDLE, PAPER FEEDER	
4	FB4-2944-000		1	SHAFT, HANDLE	
5	FB5-4839-000		1	DAMPER, PAPER FEED	
6	FB5-5160-000		1	PIN, HINGE, PAPER FEEDER	
7	FB5-5192-000		1	GUIDE, PAPER FEEDER HINGE	
8	FS1-1189-000		1	BUSHING	
9	FS2-1431-000		1	BUSHING	
10	FS5-9210-000		1	SCREW,STEPPED,M4	
11	FS7-2386-000		1	SPRING, TENSION	
12	FB5-4816-000		2	PLATE, PRESSURE, BIG	
13	FB5-4817-000		2	PLATE, PRESSURE, SMALL	
14	FS1-1189-000		1	BUSHING	
15	XA9-0700-000		2	SCREW,TP,M4X8	
16	FB5-4976-000		1	SPACER, DEVELOPING RAIL SLIDE	
17	FB5-4979-000		1	SHIELD, RAIL, UPPER	
18	FF3-1136-000		1	CABLE, TONNER SENSOR	J3021,3022
18A	VS1-5057-003		1	CONNECTOR, SNAP TIGHT	J3021
19	FF5-1458-020		1	MOUNT, ELECTRODE	
20	FB2-3900-030		4	CAM, PRESSURE APPLICATION	
21	FB4-5382-000		1	HANDLE, DEVELOPING PRESSURE	
22	FS7-2387-000		4	SPRING, COMPRESSION	
23	FB5-5265-000		1	PLATE, GROUNDING	
24	FB5-9567-000		1	HOLDER, PAPER DUST	
25	FB5-4975-000		1	SHAFT, PRESSURE	
501	XB3-6400-800		AR	SCREW,RS,M4X8	
502	XB6-7501-007		3	SCREW,TP,M5X10	
503	XD2-1100-642		1	RING,E	

FIGURE & KEY NO.	PART NUMBER	RANK	Q'TY	DESCRIPTION	SERIAL NUMBER / REMARKS
104 - 504	XB6-7400-609		2	SCREW,TP,M4X6	
505	XD2-1100-642		1	RING,E	
506	XB1-2300-409		2	SCREW,MACH.,TRUSS HEAD,M3X4	
507	XB3-6300-800		2	SCREW,RS,M3X8	
508	XB3-6400-800		1	SCREW,RS,M4X8	

COPYRIGHT ©2002 CANON INC.

FIGURE 105 INTERNAL COMPONENTS 4

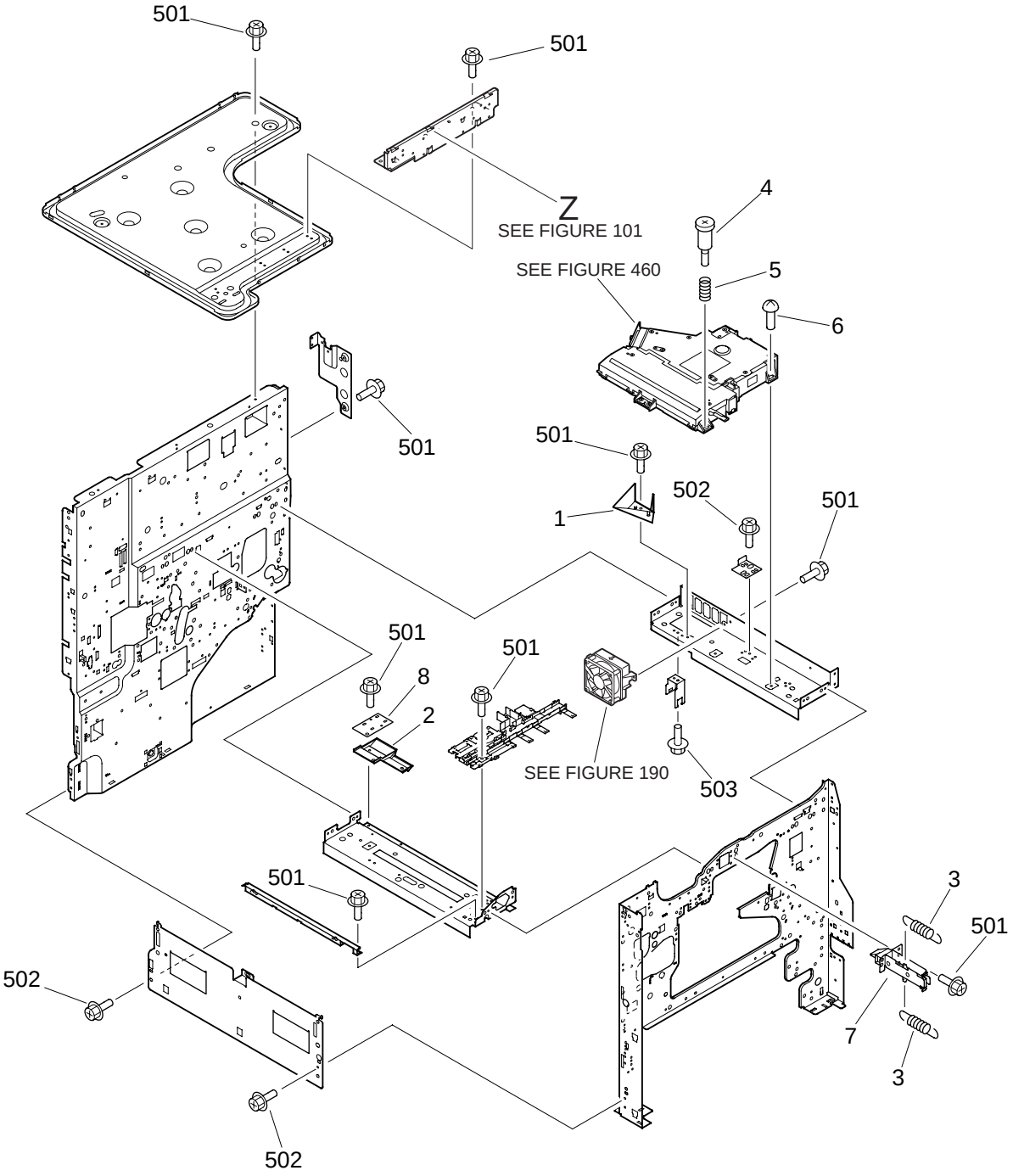

COPYRIGHT © 2002 CANON INC.

FIGURE & KEY NO.	PART NUMBER	RANK	Q'TY	DESCRIPTION	SERIAL NUMBER / REMARKS
105 -	NPN		RF	INTERNAL COMPONENTS 4	
1	FB5-5159-000		1	DUCT, LASER SCANNER	
2	FB5-5173-000		1	DUCT, CARTRIDGE	
3	FS7-2380-000		2	SPRING, TENSION	
4	FS5-9663-000		2	SCREW,STEPPED,M4	
5	FS7-2410-000		2	SPRING, COMPRESSION	
6	XA9-1289-000		2	SCREW,W/WASHER,M4X10	
7	FF6-0245-000		1	LASER SHUTTER LEVER UNIT	
8	FB5-4820-000		1	SHIELD, LASER CABLE	
501	XB3-6400-800		AR	SCREW,RS,M4X8	
502	XB3-6400-800		4	SCREW,RS,M4X8	
503	XB3-6400-800		1	SCREW,RS,M4X8	

FIGURE 106 INTERNAL COMPONENTS 5

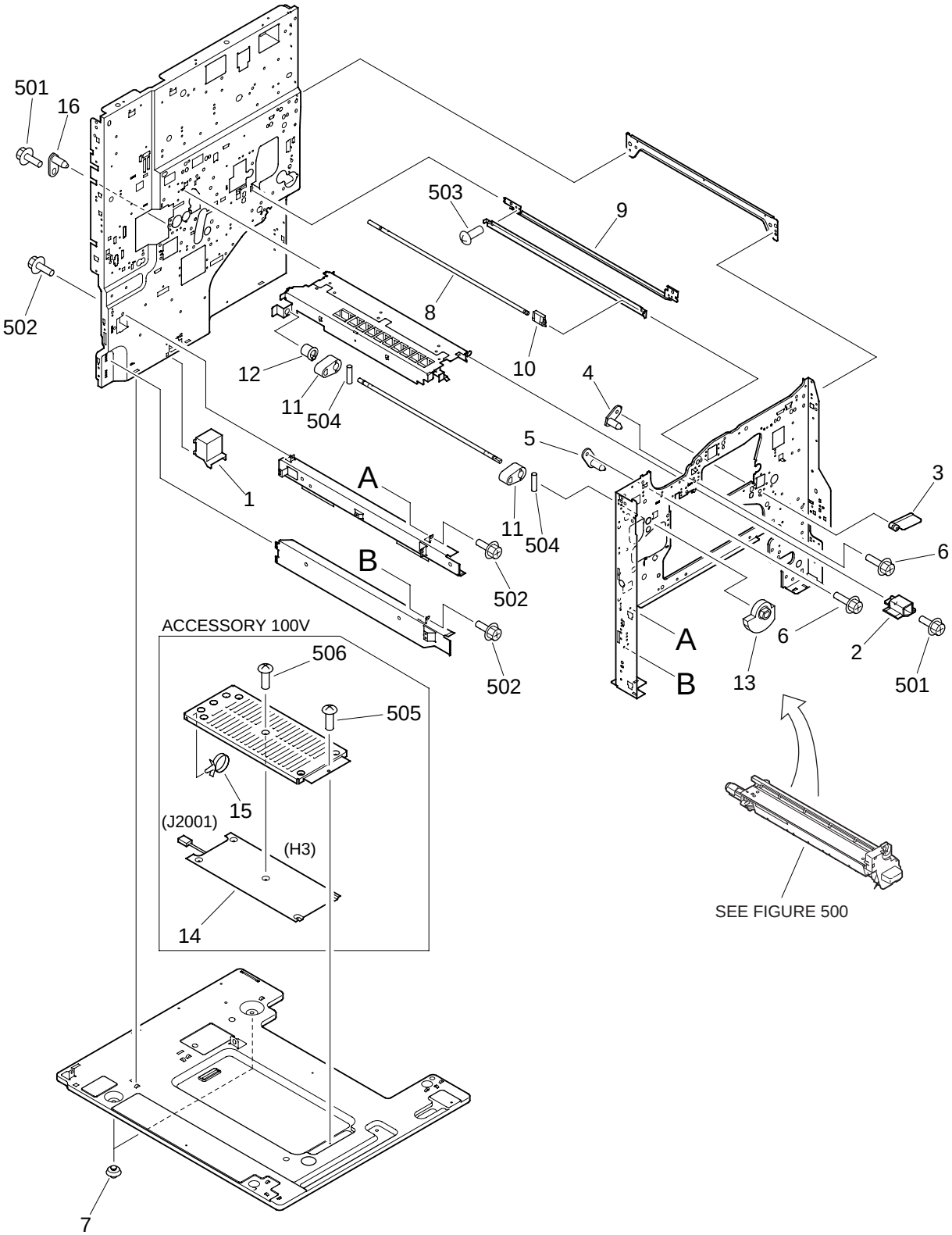

COPYRIGHT ©2002 CANON INC.

FIGURE & KEY NO.	PART NUMBER	RANK	Q'TY	DESCRIPTION	SERIAL NUMBER / REMARKS
106 -	NPN		RF	INTERNAL COMPONENTS 5	
1	FB3-3192-030		1	COVER, HEATER CONNECTOR	
2	FB5-5059-000		1	GUIDE, CARTRIDGE	
3	FB5-9252-000		1	HANDLE, PAPER DUST CLEANING	
4	FF6-0247-000		1	PIN, POSITIONING	
5	FF6-0111-000		1	PIN, POSITIONING	
6	XA9-0721-000		AR	SCREW,RS,M4X10	
7	XH9-0125-000		2	FOOT, RUBBER	
8	FB5-9249-000		1	ROD, TENSION	
9	FF6-0092-000		1	PLATE, PAPER DUST CLEANING	
10	FF6-0102-000		1	PAD UNIT, PAPER DUST CLEANING	
11	FB6-2770-000		2	CAM, PRESSURE RELEASE	
12	FS5-1953-000		1	BUSHING	
13	FS7-0707-000		1	GEAR, 22T	
14	FH7-4576-000		1	HEATER, CASSETTE	ACCESSORY 100V H3 J2001
15	WT2-5041-000		1	TIE, CABLE	ACCESSORY 100V
16	FF6-0243-000		1	PIN, POSITIONING	
501	XB3-6400-800		AR	SCREW,RS,M4X8	
502	XB3-6400-800		12	SCREW,RS,M4X8	
503	XB1-2300-409		2	SCREW,MACH.,TRUSS HEAD,M3X4	
504	XD3-2200-122		2	PIN,DOWEL	
505	XB1-2400-606		1	SCREW,MACH.,TRUSS HEAD,M4X6	ACCESSORY 100V
506	XB1-2400-409		5	SCREW,MACH.,TRUSS HEAD,M4X4	ACCESSORY 100V

FIGURE 107 MACHINE REAR PLATE

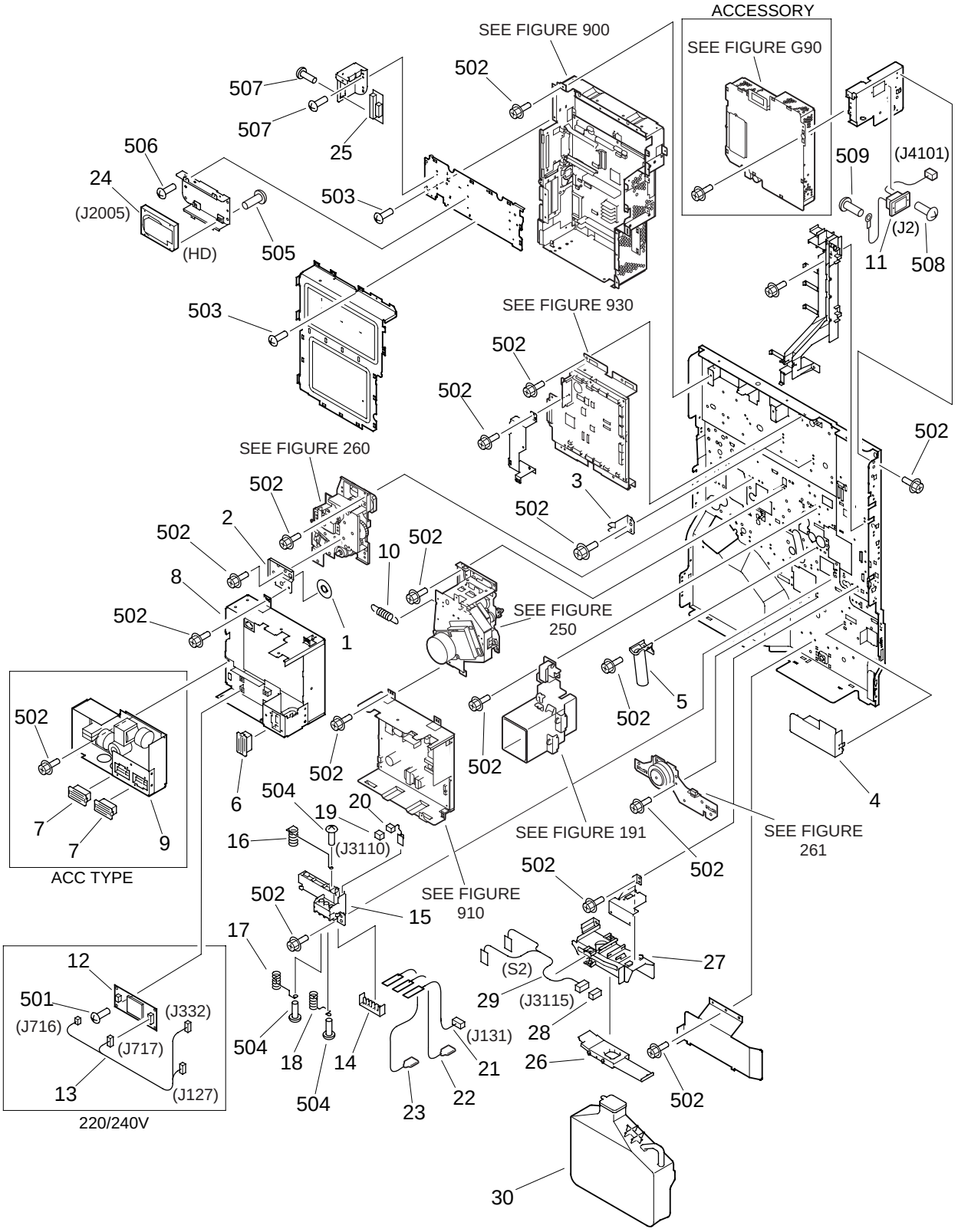

COPYRIGHT © 2002 CANON INC.

FIGURE & KEY NO.	PART NUMBER	RANK	Q'TY	DESCRIPTION	SERIAL NUMBER / REMARKS
107 -	NPN		RF	MACHINE REAR PLATE	
1	FB5-5032-000		1	FLANGE, BELT, 2	
2	FB5-5048-000		1	COVER, PICK-UP DRIVE SHAFT	
3	FB5-5098-000		2	PLATE, GROUNDING	
4	FB5-5264-000		1	COVER, CONNECTOR	
5	FF6-0244-000		1	JOINT, PIPE	
6	FH2-6552-000		1	COVER, CONNECTOR	
7	FH2-6552-000		2	COVER, CONNECTOR	ACC TYPE
8	FH3-2613-000		1	SWITCHING REGULATOR PCB ASS'Y	100/120V
	FH3-2614-000		1	SWITCHING REGULATOR PCB ASS'Y	220/240V
9	FH3-2615-000		1	SWITCHING REGULATOR PCB ASS'Y	100/120V ACC TYPE
	FH3-2616-000		1	SWITCHING REGULATOR PCB ASS'Y	220/240V ACC TYPE
10	FS7-2385-000		1	SPRING, TENSION	
11	FG3-1995-000		1	CABLE, POWER SUPPLY LATTICE	J2,4101
12	FG3-1608-000		1	THERMISTOR PCB ASSEMBLY	220/240V
13	FG3-1616-000		1	CABLE, THERMISTOR POWER SUPPLY	220/240V J127,332,716,717
14	FB3-2596-000		1	SUPPORT, CORD	
15	FB5-4826-000		1	CONNECTOR, HV TRANSFER	
16	FB5-4827-000		1	SPRING UNIT, CONTACT	
17	FB5-4828-000		1	SPRING UNIT, CONTACT	
18	FB5-4829-000		1	SPRING UNIT, CONTACT	
19	VS1-5057-002		1	CONNECTOR, SNAP TIGHT	J3110
20	FG3-0133-000		1	DRUM SENSOR UNIT	
21	FG3-1624-000		1	CABLE, TRANSFER GUIDE, HV	J131
22	FG3-1625-000		1	CABLE, TRANSFER, HV	
23	FG3-1626-000		1	CABLE, STATIC ELIMINATOR, HV	
24	WM2-5158-000		1	HDD, DJSA-210	100V HD J2005
	WM2-5160-000		1	HDD, MK6017MAP	120/220/240V HD J2005
25	FG3-1744-000		1	CENTRO PCB ASSEMBLY	
26	FB5-5014-000		1	LID, SLIDE	

FIGURE & KEY NO.	PART NUMBER	RANK	Q'TY	DESCRIPTION	SERIAL NUMBER / REMARKS
107 - 27	FF6-0166-000		1	RAIL, WASTE TONER SENSOR	
28	VS1-5057-004		1	CONNECTOR, SNAP TIGHT	J3115
29	FM5-5153-000		1	WASTE TONER SENSOR PCB ASS'Y	S2 J3115
30	FG6-5815-000		1	BOTTLE, WASTE TONER	
501	XB1-2300-607		4	SCREW,MACH.,TRUSS HEAD,M3X6	220/240V
502	XB3-6400-800		AR	SCREW,RS,M4X8	
503	XB6-7400-807		31	SCREW,TP,M4X8	
504	XB1-2300-407		3	SCREW,MACH.,TRUSS HEAD,M3X4	
505	XB6-7300-407		4	SCREW,TP,M3X4	
506	XB6-7400-807		4	SCREW,TP,M4X8	
507	XB1-2300-607		4	SCREW,MACH.,TRUSS HEAD,M3X6	
508	XB1-2300-609		2	SCREW,MACH.,TRUSS HEAD,M3X6	
509	XB2-7400-607		1	SCREW,W/WASHER,M4X6	

COPYRIGHT ©2002 CANON INC.

FIGURE 110 POWER CORD TERMINAL ASSEMBLY (100/120V)

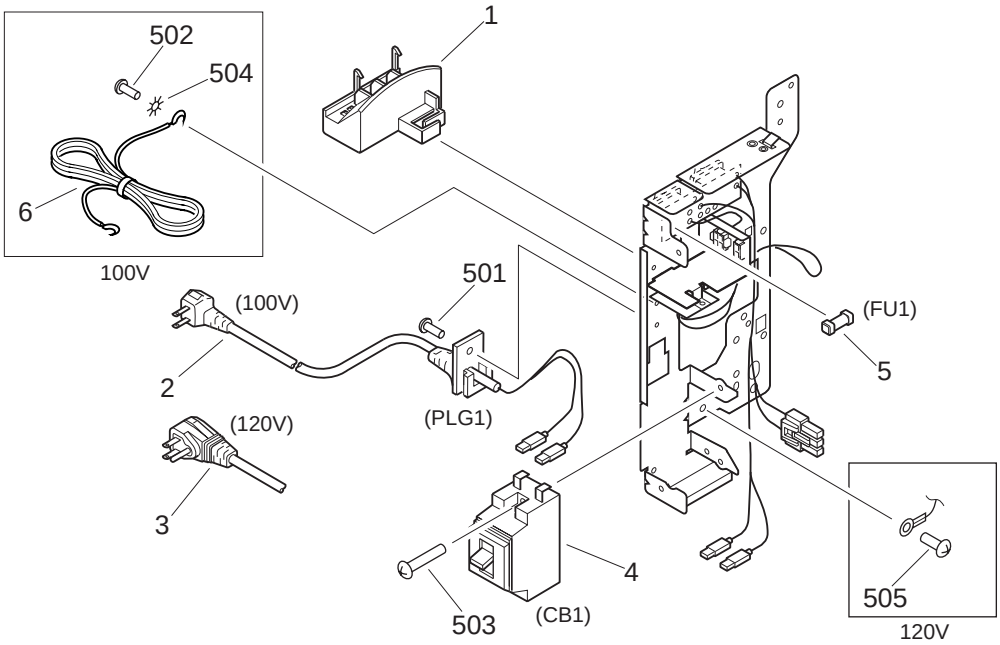

NOTE : This assembly does not include the part shown with key No. 6.

FIGURE & KEY NO.	PART NUMBER	RANK	Q'TY	DESCRIPTION	SERIAL NUMBER / REMARKS
110 -	FG6-5777-000		1	POWER CORD TERMINAL ASSEMBLY	100V
	FG6-5781-000		1	POWER CORD TERMINAL ASSEMBLY	120V
1	FB5-5193-000		1	HANDLE, RIGHT REAR	
2	FF3-4192-000		1	CORD, POWER	100V PLG1
3	FF3-4193-000		1	CORD, POWER	120V PLG1
4	FH7-7528-000		1	BREAKER, CIRCUIT	CB1
5	VD7-0211-001		1	FUSE	FU1
6	FH2-5006-000		1	CABLE, GROUNDING	100V SEE NOTE
501	XB1-2300-609		1	SCREW,MACH.,TRUSS HEAD,M3X6	
502	XB1-2400-803		1	SCREW,MACH.,TRUSS HEAD,M4X8	100V
503	XB1-2402-009		2	SCREW,MACH.,TRUSS HEAD,M4X20	
504	XD1-4200-402		1	WASHER,TOOTHED LOCK	100V
505	XB2-7400-607		1	SCREW,W/WASHER,M4X6	120V

FIGURE 111 POWER CORD TERMINAL ASSEMBLY (220/240V)

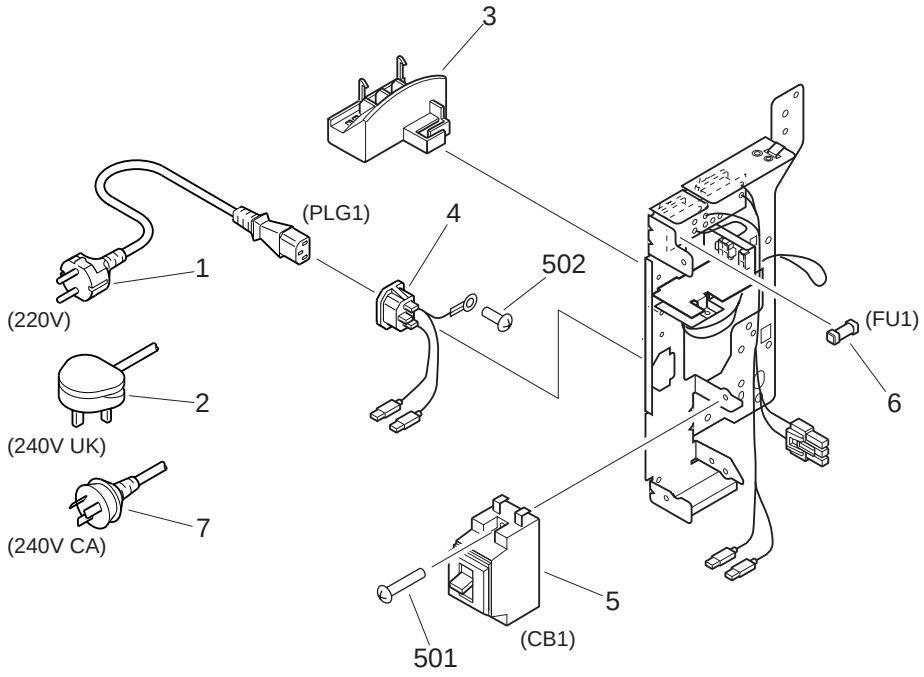

NOTE : This assembly does not include the parts shown with key No. 1, 2, and 7.

FIGURE & KEY NO.	PART NUMBER	RANK	Q'TY	DESCRIPTION	SERIAL NUMBER / REMARKS
111 -	FG6-5782-000		1	POWER CORD TERMINAL ASSEMBLY	220/240V
1	FH2-5761-020		1	POWER CORD	220V PLG1 SEE NOTE
2	FH2-6941-00G		1	POWER CORD	240V UK PLG1 SEE NOTE
3	FB5-5193-000		1	HANDLE, RIGHT REAR	
4	FF3-4194-000		1	CABLE, AC SOCKET	
5	FH7-7527-000		1	BREAKER, CIRCUIT	CB1
6	VD7-0641-001		1	FUSE, 1A, 250V	FU1
7	FH2-5763-000		1	POWER CORD	240V CA PLG1 SEE NOTE
501	XB1-2402-009		2	SCREW,MACH.,TRUSS HEAD,M4X20	
502	XB2-7400-607		1	SCREW,W/WASHER,M4X6	

COPYRIGHT ©2002 CANON INC.

FIGURE 120 RIGHT DOOR ASSEMBLY

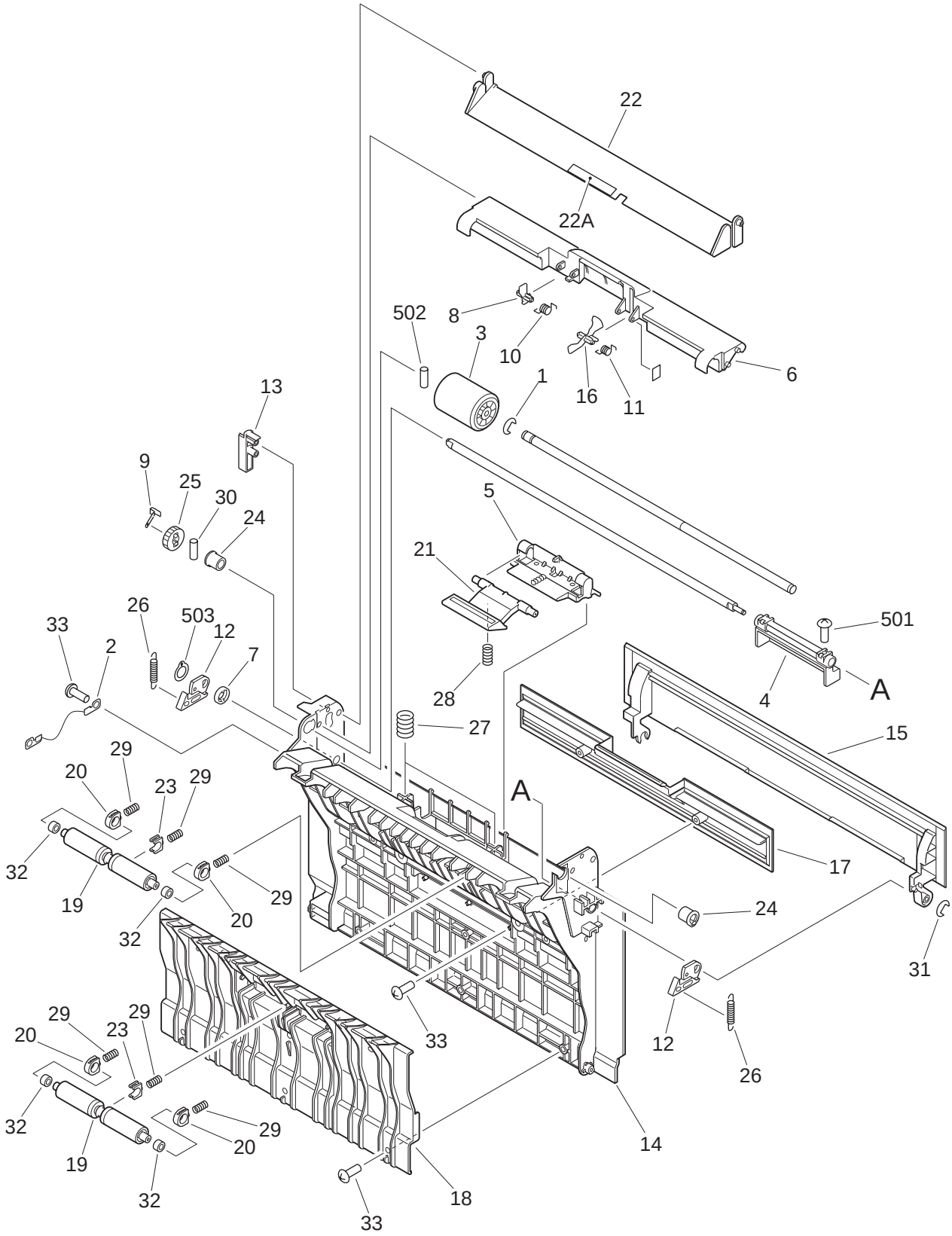

COPYRIGHT © 2002 CANON INC.

FIGURE & KEY NO.	PART NUMBER	RANK	Q'TY	DESCRIPTION	SERIAL NUMBER / REMARKS
120 -	FG6-5648-000		1	RIGHT DOOR ASSEMBLY	
1	FA4-1159-000		1	RING, RETAINING	
2	FB1-8439-000		1	WIRE	
3	FB1-8581-000		1	ROLLER, PAPER PICK-UP	
4	FB3-2812-000		1	HANDLE, RIGHT DOOR	
5	FB3-2815-000		1	ARM, MULTI FEED, 1	
6	FB6-2788-000		1	COVER, MULTI FEED ROLLER	
7	FB3-2821-000		1	BUSHING	
8	FB3-2833-000		1	FLAG, PAPER SENSOR, 2	
9	FB3-2834-000		1	PLATE, GROUNDING, MULTIROLLER	
10	FB3-2835-000		1	SPRING, TORSION	
11	FB4-3170-000		1	SPRING, TORSION	
12	FB6-2785-000		2	HOOK, RIGHT DOOR	
13	FB6-2786-000		1	ARM, CAM FOLLOWER	
14	FB5-4733-000		1	DOOR, RIGHT	
15	FB5-4766-000		1	DOOR, RIGHT UPPER	
16	FB5-5145-000		1	FLAG, MULTI PAPER SENSOR	
17	FB5-5194-000		1	PANEL, RIGHT DOOR BLANKING	
18	FB5-5195-000		1	GUIDE, INNER	
19	FB5-5199-000		2	ROLLER, PAPER FEED	
20	FB5-5200-020		4	HOLDER, ROLLER	
21	FE5-4132-000		1	ARM, MULTI FEED	
22	FF6-0101-000		1	GUIDE, MULTI FEED	
22A	FB1-8584-000		1	SHEET, MANUAL FEED PLATE	
23	FS5-1598-000		2	BLOCK, ROLLER	
24	FS5-1950-000		2	BUSHING	
25	FS7-0761-000		1	GEAR, 19T	
26	FS6-2337-000		2	SPRING, TENSION	
27	FS6-2790-000		2	SPRING, COMPRESSION	
28	FS6-2791-000		1	SPRING, COMPRESSION	

FIGURE & KEY NO.	PART NUMBER	RANK	Q'TY	DESCRIPTION	SERIAL NUMBER / REMARKS
120 - 29	FS7-2406-000		6	SPRING, COMPRESSION	
30	XD9-0104-000		1	PIN,DOWEL	
31	XD9-0134-000		1	RING,E	
32	XG9-0407-000		4	BEARING, BALL, UGF106P12ZZD4ML	
33	XA9-0605-000		9	SCREW,P,M4X8	
501	XB1-2400-809		1	SCREW,MACH.,TRUSS HEAD,M4X8	
502	XD3-2160-162		1	PIN,DOWEL	
503	XD2-2100-602		1	RING,GRIP	

COPYRIGHT ©2002 CANON INC.

FIGURE 130 CONTROL PANEL ASSEMBLY

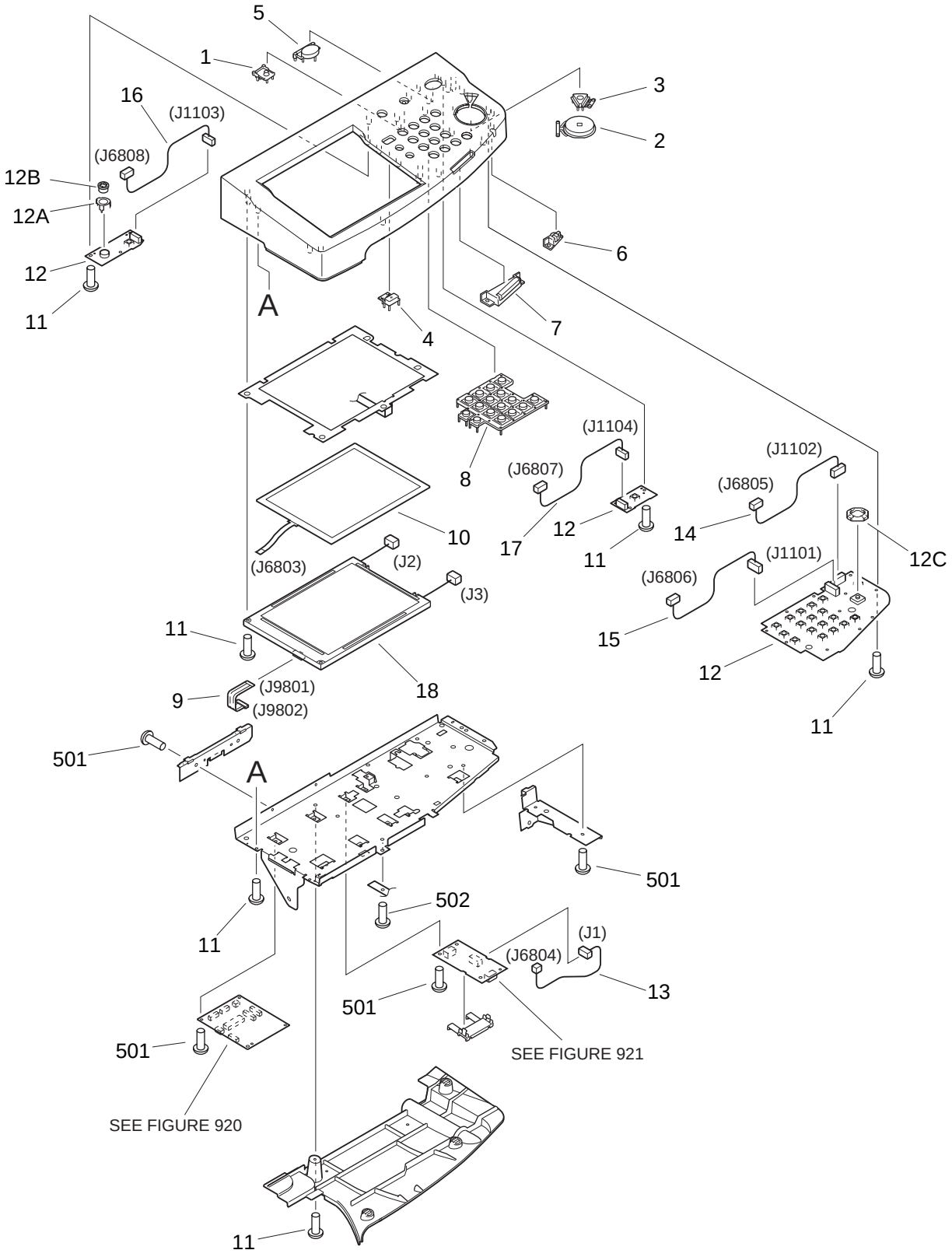

NOTE : This assembly includes the assemblies shown in Figure 920 and 921.

COPYRIGHT © 2002 CANON INC.

FIGURE & KEY NO.	PART NUMBER	RANK	Q'TY	DESCRIPTION	SERIAL NUMBER / REMARKS
130 -	FG6-5753-000		1	CONTROL PANEL ASSEMBLY	JAPANESE SEE NOTE
	FG6-5754-000		1	CONTROL PANEL ASSEMBLY	ENGLISH USA SEE NOTE
	FG6-5755-000		1	CONTROL PANEL ASSEMBLY	ILLUSTRATION SEE NOTE
	FG6-5756-000		1	CONTROL PANEL ASSEMBLY	ENGLISH EXCEPT USA SEE NOTE
1	FB4-5005-000		1	KEY TOP, COUNTER	
2	FB5-2172-000		1	KEY TOP, START	
3	FB5-2173-000		1	KEY TOP, STOP	
4	FB5-3698-000		1	KEY TOP, RESET	
5	FB5-3699-000		1	KEY TOP, POWER SUPPLY	
6	FB5-5076-000		1	WINDOW, LAMP, 1	
7	FB5-5077-000		1	WINDOW, LAMP, 2	
8	FF6-0206-000		1	KEY TOP, NUMBERS	
9	FH2-6842-000		1	CABLE, FCC	J9801,9802
10	FH6-0784-000		1	ANALOG TOUCH PANEL UNIT	J6803
11	XA9-0591-000		22	SCREW,M3X8	
12	FG6-7021-000		1	CONTROL PANEL PCB ASSEMBLY	
12A	FB3-8320-000		1	PLATE, GROUNDING	
12B	FB5-3718-000		1	KNOB, CONTRAST	
12C	FB5-2195-000		1	HOLDER, LED	
13	FG6-7022-000		1	CABLE, CONTROL PANEL INVERTER	J1,6804
14	FG6-7068-000		1	CABLE, CONTROL PANEL KEY, 1	J1102,6805
15	FG6-7069-000		1	CABLE, CONTROL PANEL KEY, 2	J1101,6806
16	FG6-7070-000		1	CABLE, COUNTER VR	J1103,6808
17	FG6-7071-000		1	CABLE, SWITCH	J1104,6807
18	FG6-9149-000		1	LCD CONTROL PANEL UNIT	J2,3,9801
501	XB1-2300-607		11	SCREW,MACH.,TRUSS HEAD,M3X6	
502	XB2-8300-607		1	SCREW,W/WASHER,M3X6	

FIGURE 190 DEVELOPING FAN ASSEMBLY

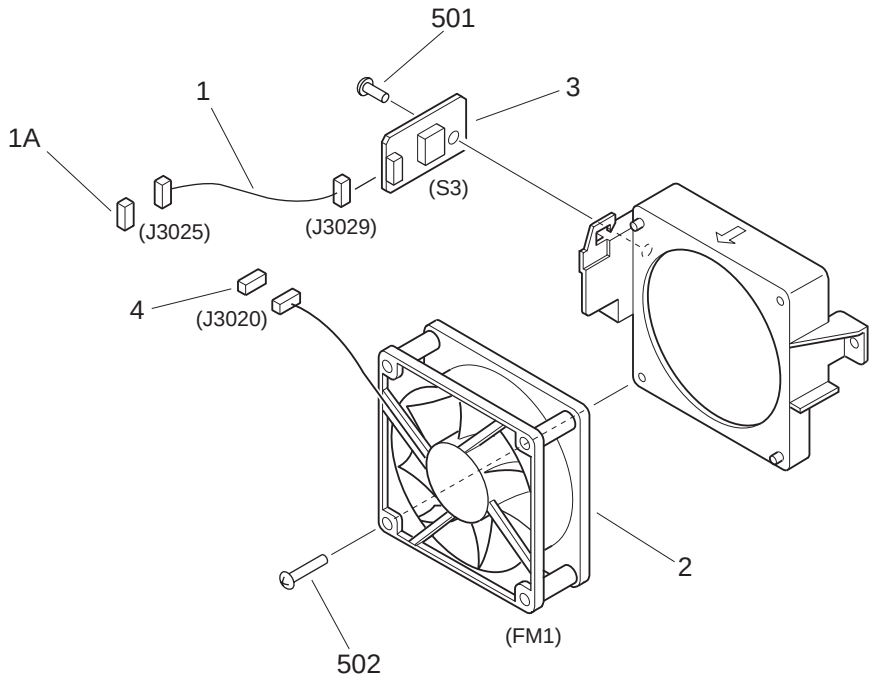

FIGURE & KEY NO.	PART NUMBER	RANK	Q'TY	DESCRIPTION	SERIAL NUMBER / REMARKS
190 -	FG6-5638-000		1	DEVELOPING FAN ASSEMBLY	
1	FF3-4172-000		1	CABLE, ENVIRONMENT SENSOR	J3025,3029
1A	VS1-5057-004		1	CONNECTOR, SNAP TIGHT	J3025
2	FH6-1852-000		1	FAN	FM1 J3020
3	FH7-7559-000		1	HUMIDITY SENSOR UNIT	S3 J3029
4	VS1-5057-003		1	CONNECTOR, SNAP TIGHT	J3020
501	XB4-7300-809		1	SCREW,TAPPING,TRUSS HEAD,M3X8	
502	XB4-7403-509		2	SCREW,TAPPING,TRUSS HEAD,M4X35	

COPYRIGHT ©2002 CANON INC.

FIGURE 191 MASHINE EXHAUST FAN ASSEMBLY

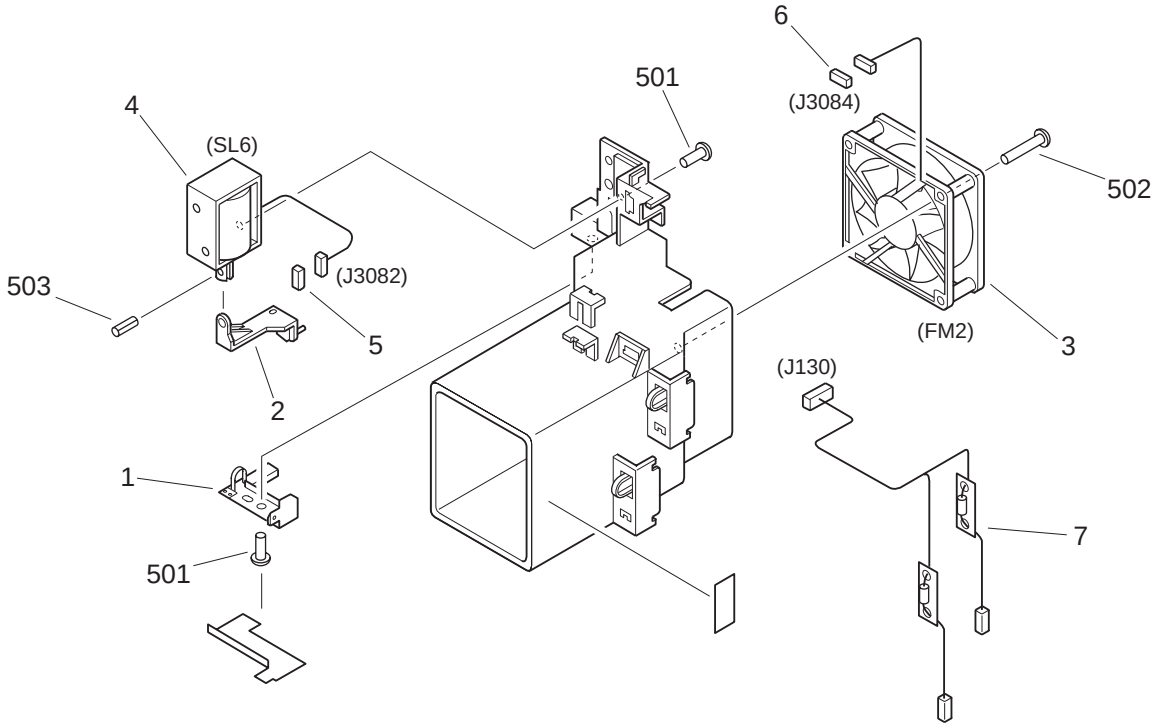

FIGURE & KEY NO.	PART NUMBER	RANK	Q'TY	DESCRIPTION	SERIAL NUMBER / REMARKS
191 -	FG6-5814-000		1	MACHINE EXHAUST FAN ASSEMBLY	
1	FB5-5257-000		1	PLATE, TERMINAL	
2	FB5-5258-000		1	LINK, DRIVE	
3	FH6-1852-000		1	FAN	FM2 J3084
4	FH6-5048-000		1	SOLENOID	SL6 J3082
5	VS1-5057-002		1	CONNECTOR, SNAP TIGHT	J3082
6	VS1-5057-003		1	CONNECTOR, SNAP TIGHT	J3084
7	FG3-1615-000		1	CABLE, HV EXHAUST	J130
501	XB1-2300-409		3	SCREW,MACH.,TRUSS HEAD,M3X4	
502	XB4-7403-509		2	SCREW,TAPPING,TRUSS HEAD,M4X35	
503	XD3-1300-102		1	PIN,SPRING	

FIGURE 250 MAIN DRIVE ASSEMBLY

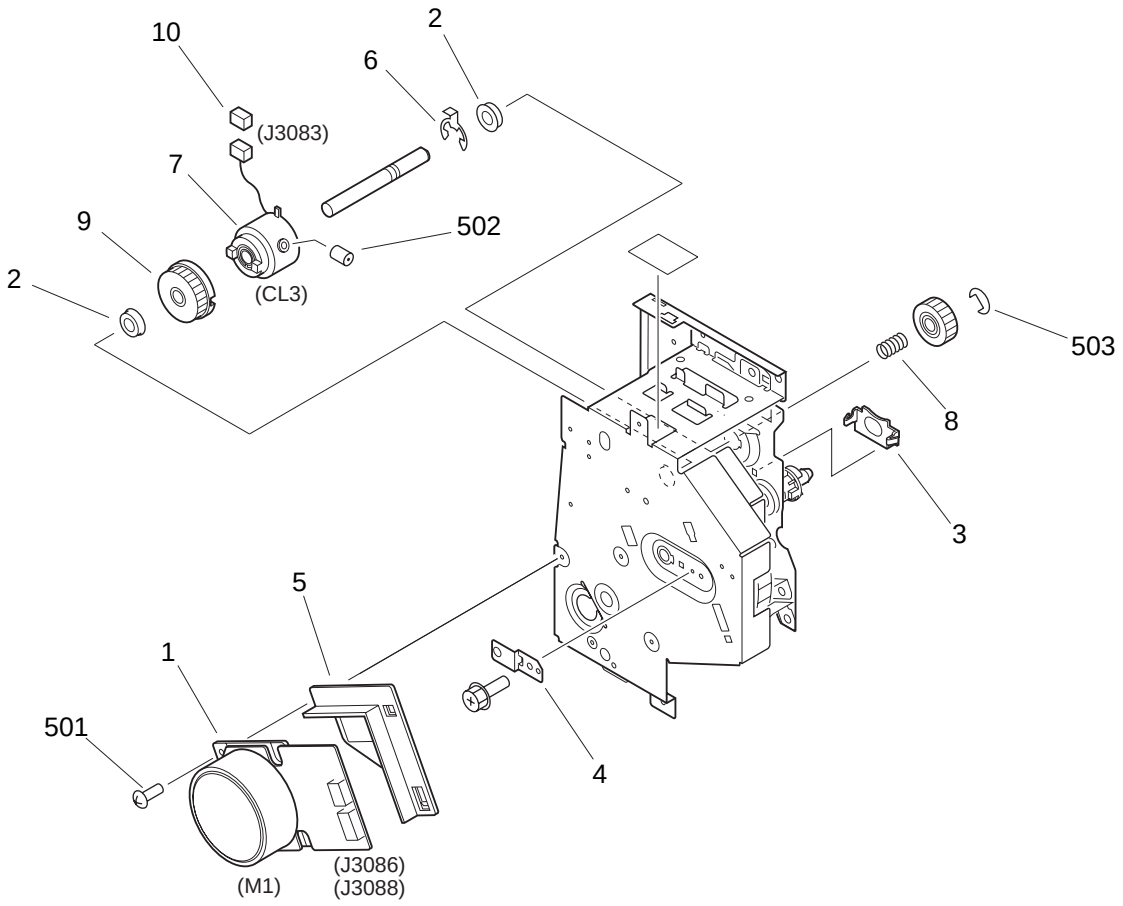

COPYRIGHT ©2002 CANON INC.

FIGURE & KEY NO.	PART NUMBER	RANK	Q'TY	DESCRIPTION	SERIAL NUMBER / REMARKS
250 -	FG6-5727-000		1	MAIN DRIVE ASSEMBLY	
1	FH6-1845-000		1	MOTOR, DC BRUSHLESS	M1 J3086,3088
2	FA9-2112-000		2	BUSHING	
3	FB3-2576-000		1	SUPPORT, SLEEVE	
4	FB5-5036-000		1	PLATE, GROUNDING	
5	FB5-5038-000		1	SHIELD, MOTOR	
6	FB5-5039-000		1	RING, E	
7	FH6-5007-000		1	CLUTCH, ELECTRO MAGNETIC	CL3 J3083
8	FS5-2312-000		1	SPRING, COMPRESSION	
9	FS5-3815-000		1	PULLEY, 51T	
10	VS1-5057-002		1	CONNECTOR, SNAP TIGHT	J3083
501	XB6-7300-609		4	SCREW,TP,M3X6	
502	XB6-2300-409		2	SETSCERW,M3X4	
503	XD2-1100-502		1	RING,E	

FIGURE 260 PAPER PICK-UP DRIVE ASSEMBLY

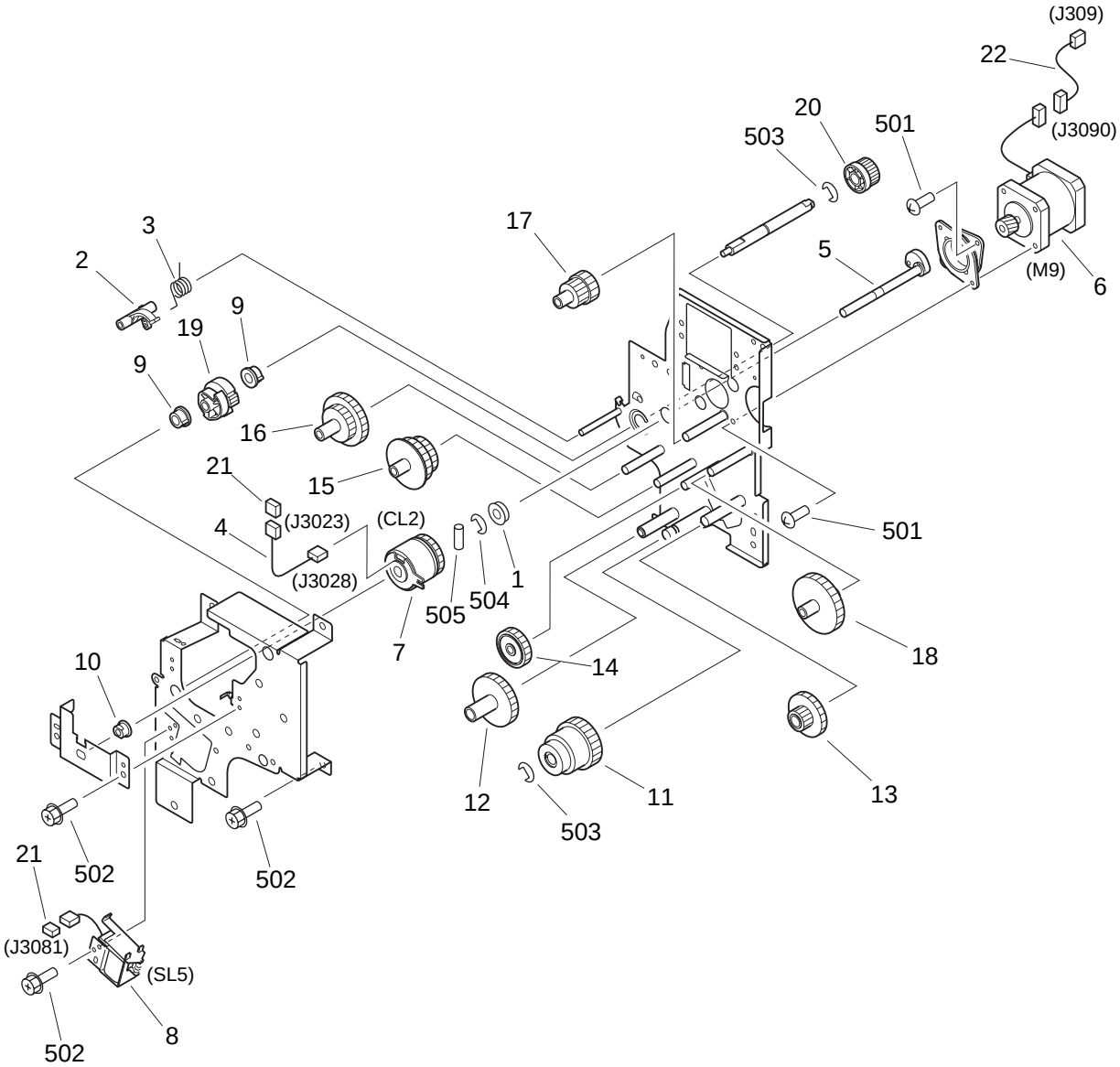

NOTE : This assembly does not include the part shown with key No. 22.

COPYRIGHT © 2002 CANON INC.

FIGURE & KEY NO.	PART NUMBER	RANK	Q'TY	DESCRIPTION	SERIAL NUMBER / REMARKS
260 -	FG6-5726-000		1	PAPER PICK-UP DRIVE ASSEMBLY	
1	FA9-2112-000		1	BUSHING	
2	FB5-5045-000		1	ARM, TRIGGER	
3	FB5-5046-000		1	SPRING, TORSION	
4	FF3-4190-000		1	CABLE, CLUTCH	J3023,3028
5	FF6-0186-000		1	SHAFT, CAM JOINT	
6	FH6-1849-000		1	MOTOR, STEPPING	M9 J3090
7	FH6-5006-000		1	CLUTCH, ELECTRO MAGNETIC	CL2 J3028
8	FH6-5051-000		1	SOLENOID	SL5 J3081
9	FS5-1943-000		2	BUSHING	
10	FS5-1947-000		1	BUSHING	
11	FS5-3824-000		1	PULLEY, 38T/34T	
12	FS7-0725-000		1	GEAR, 36T	
13	FS7-0726-000		1	GEAR, 36T/18T	
14	FS7-0727-000		1	GEAR, 33T	
15	FS7-0728-000		1	GEAR, 25T/39T	
16	FS7-0729-000		1	GEAR, 36T/24T	
17	FS7-0730-000		1	GEAR, 39T/20T	
18	FS7-0731-000		1	GEAR, 49T	
19	FS7-0737-000		1	GEAR, 24T	
20	FS7-0753-000		1	GEAR, 17T	
21	VS1-5057-002		2	CONNECTOR, SNAP TIGHT	J3023,3081
22	FF3-4165-000		1	CABLE, REGISTRATION	SEE NOTE J309,3090
501	XB1-2300-609		4	SCREW,MACH.,TRUSS HEAD,M3X6	
502	XB3-6300-609		7	SCREW,RS,M3X6	
503	XD2-1100-502		2	RING,E	
504	XD2-1100-642		1	RING,E	
505	XD3-2200-142		1	PIN,DOWEL	

FIGURE 261 DUPLEXING DRIVE ASSEMBLY

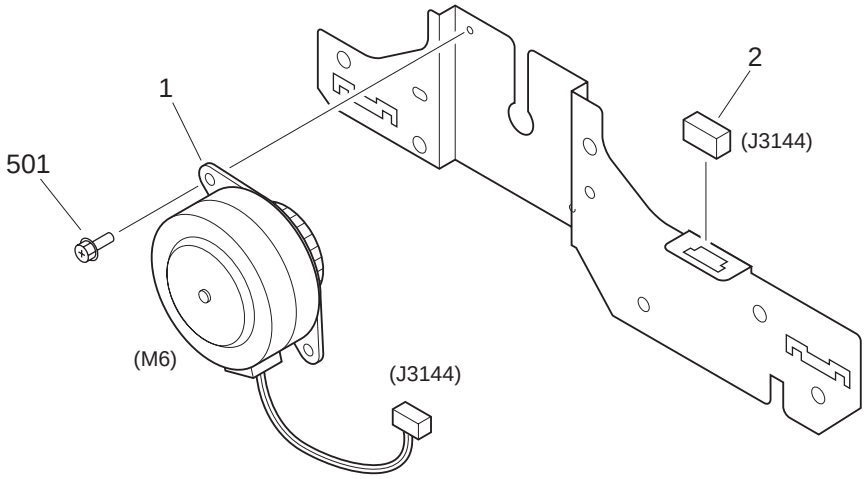

FIGURE & KEY NO.	PART NUMBER	RANK	Q'TY	DESCRIPTION	SERIAL NUMBER / REMARKS
261 -	FG6-5651-000		1	DUPLEXING DRIVE ASSEMBLY	
1	FH6-1851-000		1	MOTOR, STEPPING	M6 J3144
2	VS1-5057-004		1	CONNECTOR, SNAP TIGHT	J3144
501	XB3-6300-609		2	SCREW,RS,M3X6	

COPYRIGHT ©2002 CANON INC.

FIGURE 280 FIXING FEEDER DRIVE ASSEMBLY

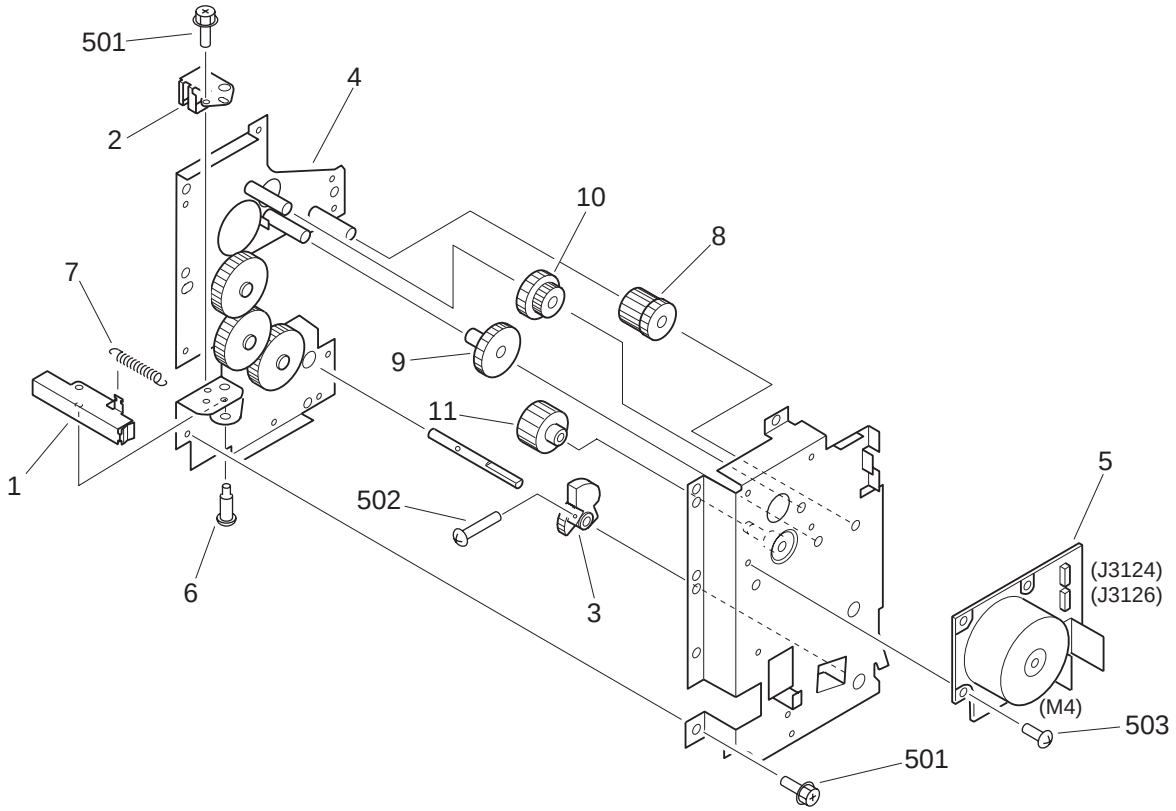

FIGURE & KEY NO.	PART NUMBER	RANK	Q'TY	DESCRIPTION	SERIAL NUMBER / REMARKS
280 -	FG6-5703-000		1	FIXING FEEDER DRIVE ASSEMBLY	
1	FB1-7099-020		1	LEVER, STOP	
2	FB1-7190-000		1	COVER, LEVER	
3	FB5-4821-000		1	CAM, PRESSURE	
4	FF6-0141-000		1	LOWER PLATE, FEEDER DRIVE	
5	FH6-1848-000		1	MOTOR, DC BRUSHLESS	M4 J3124,3126
6	FS1-9005-000		1	SCREW,STEPPED,M4	
7	FS5-2331-000		1	SPRING, TENSION	
8	FS7-0702-000		1	GEAR, 21T/28T	
9	FS7-0703-000		1	GEAR, 39T	
10	FS7-0704-000		1	GEAR, 23T/70T	
11	FS7-0705-000		1	GEAR, 16T	
501	XB3-6300-609		8	SCREW,RS,M3X6	
502	XB5-2401-609		1	SCREW,CT,M4X16	
503	XB6-7300-609		4	SCREW,TP,M3X6	

COPYRIGHT © 2002 CANON INC.

FIGURE 300 CASSETTE

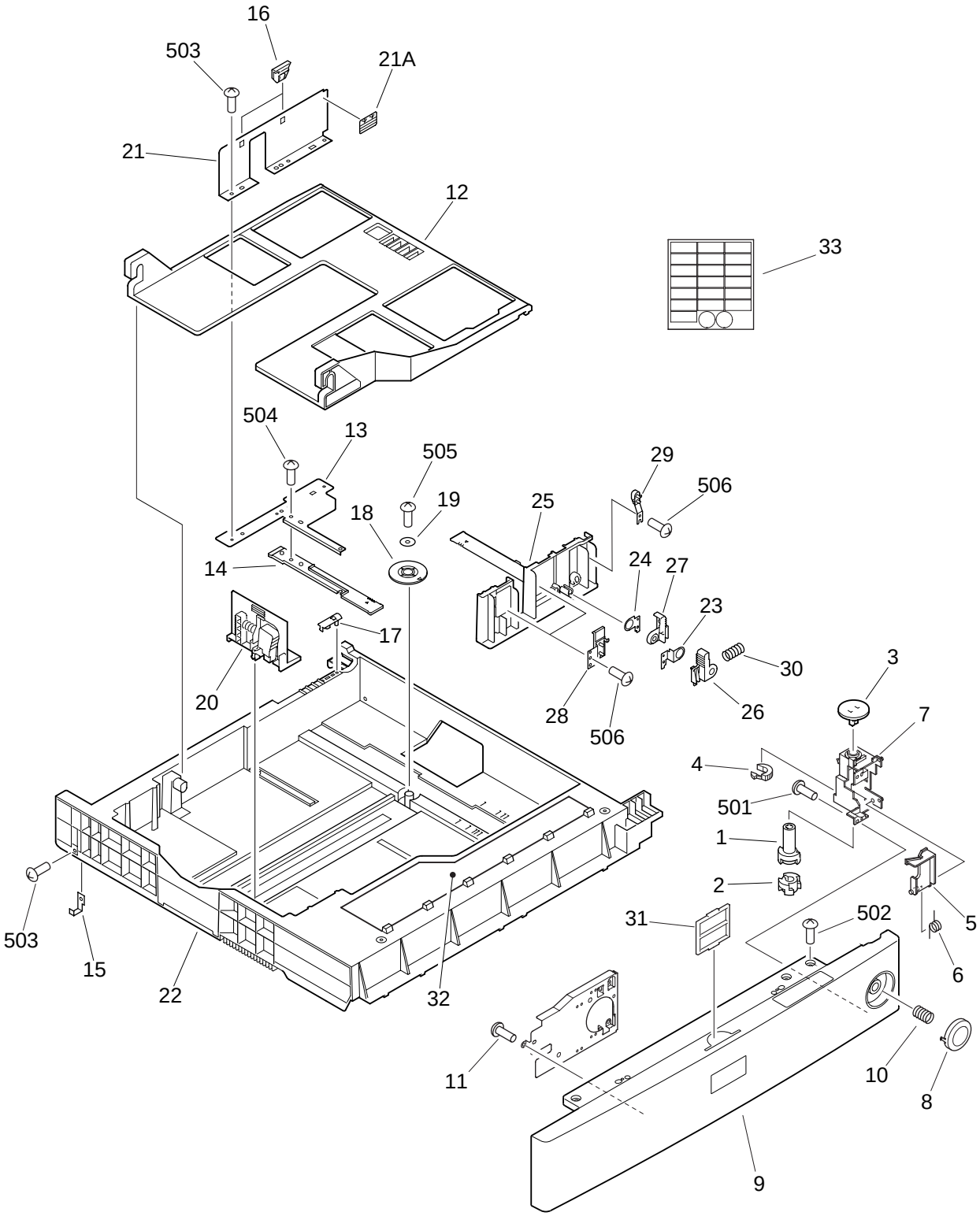

COPYRIGHT ©2002 CANON INC.

FIGURE & KEY NO.	PART NUMBER	RANK	Q'TY	DESCRIPTION	SERIAL NUMBER / REMARKS
300 -	NPN		RF	CASSETTE	
1	FB3-2942-000		1	CAM, SIZE SENSOR, 2	
2	FB3-2943-000		1	CAM, SIZE SENSOR, 3	
3	FB5-3811-000		1	KNOB, SIZE SENSOR	
4	FB5-4735-000		1	CAM, SIZE SENSOR, 1	
5	FB5-4737-000		1	ARM, RELEASE	LARGE TYPE
	FB5-4738-000		1	ARM, RELEASE	MIDDLE TYPE
6	FB5-4739-000		1	SPRING, TORSION	
7	FB5-4740-000		1	HINGE, CAM	
8	FB5-4743-000		1	BUTTON, CASSETTE	
9	FF6-0094-000		1	PANEL, CASSETTE, FRONT	
10	FS7-2400-000		1	SPRING, COMPRESSION	
11	XA9-0591-000		3	SCREW,M3X8	
12	FB3-2922-000		1	PLATE, PAPER LIFTING	
13	FB3-2926-000		1	PLATE, SIDE END	
14	FB3-2927-000		1	RACK, MANUAL	
15	FB3-2930-000		2	PLATE, STOP	
16	FB3-2934-000		2	CLAW, SIDE	
17	FB3-2953-000		1	BLOCK, SLIDER	
18	FB3-2955-000		1	GEAR, 20T	
19	FB3-2956-000		1	RING, GEAR STOP	
20	FB5-8353-000		1	PLATE,PAPER SIZE END	
21	FF5-4569-020		1	PLATE, SIDE END, REAR	
21A	FS6-8116-000		1	LABEL, "PAPER HEIGHT"	
22	FF6-0098-000	N	1	BODY, CASSETTE	LARGE TYPE
	FF6-0099-000	N	1	BODY, CASSETTE	MIDDLE TYPE
23	FA9-3313-000		1	PLATE, STOP, 1	
24	FA9-3314-000		1	PLATE, STOP, 2	
25	FB3-2928-000		1	PLATE, SIZE END, FRONT	
26	FB5-3812-000		1	KNOB, FRONT SIDE END PLATE, 1	

FIGURE & KEY NO.	PART NUMBER	RANK	Q'TY	DESCRIPTION	SERIAL NUMBER / REMARKS
300 - 27	FB5-3813-000		1	KNOB, FRONT SIDE END PLATE, 2	
28	FF5-4491-000		2	BLOCK, SIDE, 2	
29	FF5-4548-030		1	BLOCK, SIDE, 1	
30	FS5-2650-000		1	SPRING, COMPRESSION	
31	FB5-9250-000		1	PLATE, CASSETTE PAPER SIZE	
32	FS7-8071-000		1	LABEL, "PAPER SUPPLY"	
33	FS7-8072-000		2	LABEL, "CASSETTE PAPER SIZE"	
501	XB1-2300-609		2	SCREW,MACH.,TRUSS HEAD,M3X6	
502	XB4-7401-009		2	SCREW,TAPPING,TRUSS HEAD,M4X10	
503	XB1-2300-409		5	SCREW,MACH.,TRUSS HEAD,M3X4	
504	XB1-2300-609		2	SCREW,MACH.,TRUSS HEAD,M3X6	
505	XB4-7300-809		1	SCREW,TAPPING,TRUSS HEAD,M3X8	
506	XB4-7300-609		3	SCREW,TAPPING,TRUSS HEAD,M3X6	

COPYRIGHT ©2002 CANON INC.

FIGURE 310 PAPER PICK-UP MOUNT ASSEMBLY (1/2)

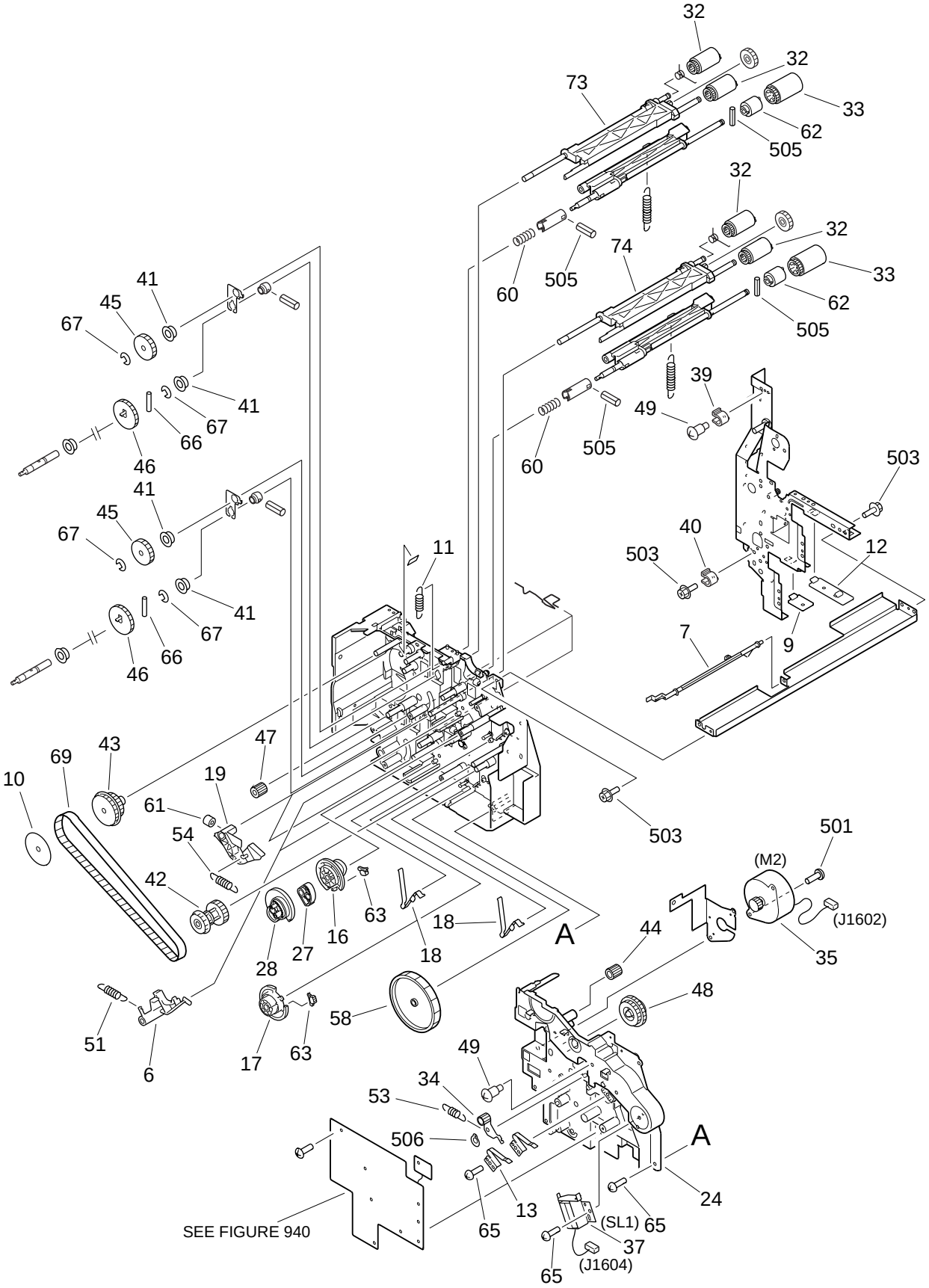

COPYRIGHT © 2002 CANON INC.

FIGURE 310 PAPER PICK-UP MOUNT ASSEMBLY (2/2)

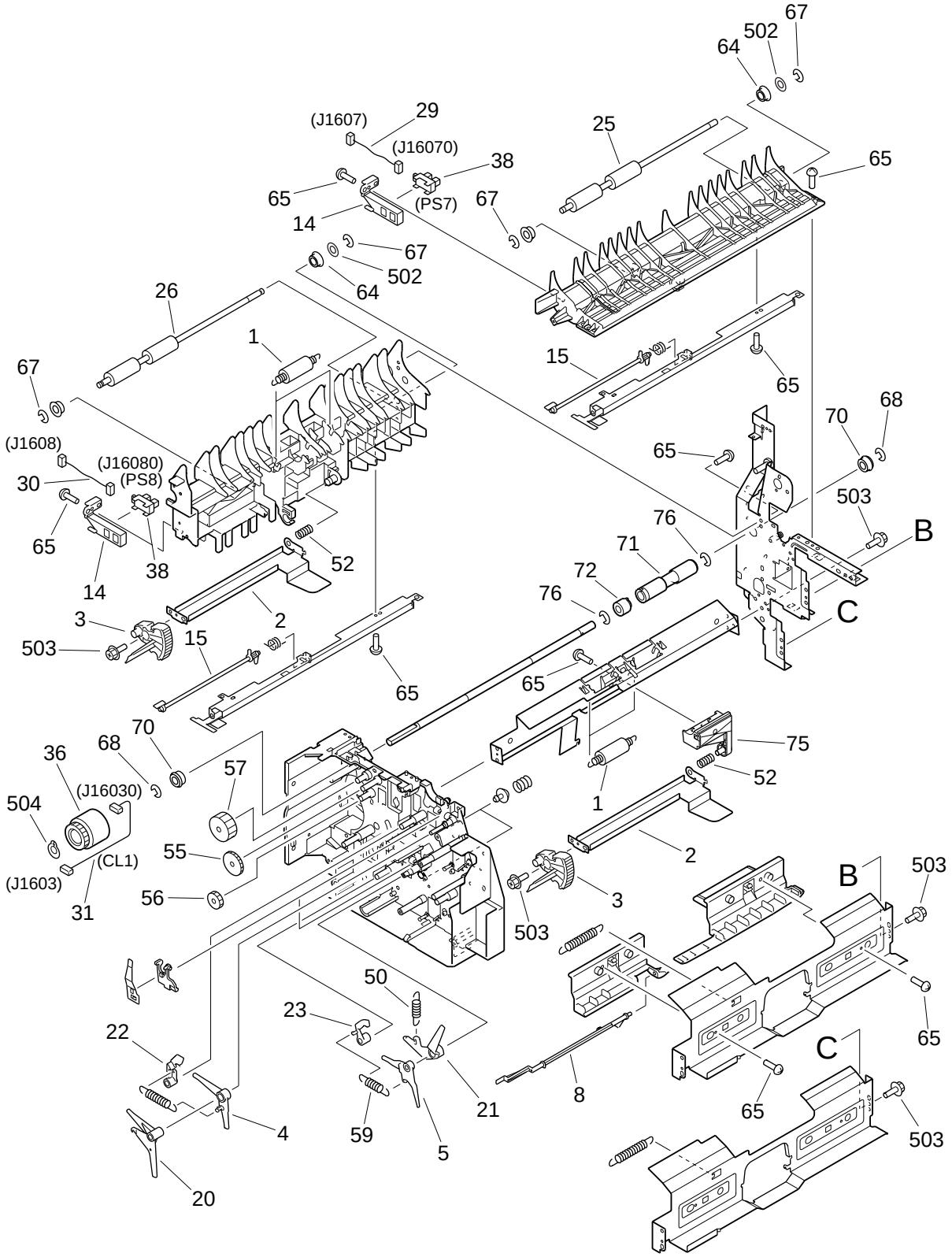

FIGURE & KEY NO.	PART NUMBER	RANK	Q'TY	DESCRIPTION	SERIAL NUMBER / REMARKS
310 -	NPN		RF	PAPER PICK-UP MOUNT ASSEMBLY	
1	FB6-2776-000		4	ROLLER, PAPER FEED	
2	FB6-2777-000		2	PLATE, LIFTER	
3	FB6-2778-000		2	GEAR, RATCHET	
4	FB6-2779-000		1	LEVER, LIFTER, UPPER	
5	FB6-2780-000		1	LEVER, LIFTER, LOWER	
6	FB6-2781-000		2	CLAW, LIFTER LOCK	
7	FB6-2782-000		1	FLAG, PAPER SENSOR, UPPER	
8	FB6-2783-000		1	FLAG, PAPER SENSOR, LOWER	
9	FB3-2894-020		1	GUIDE, LOWER CASSETTE	
10	FB3-2896-000		1	PLATE, BELT SUPPORT	
11	FS7-2413-000		1	SPRING, TENSION	
12	FB3-2897-020		1	GUIDE, UPPER CASSETTE	
13	FB3-2898-020		1	SPRING, LEAF	
14	FB4-2817-000		2	MOUNT, SENSOR	
15	FB4-3343-000		2	FLAG, RETRY SENSOR	
16	FB6-2787-020		1	CAM, LIFT UP, UPPER	
17	FB5-9802-000		1	CAM, LIFT UP, LOWER	
18	FB4-5349-000		2	SPRING, LEAF	
19	FB6-2789-020		2	CLAW, LIFTER ARM	
20	FB5-9794-000		1	ARM, LIFTER, UPPER	
21	FB6-2790-000		1	ARM, LIFTER, LOWER	
22	FB5-9795-000		1	LEVER, LOCK, UPPER	
23	FB6-2792-000		1	LEVER, PICK LOCK, LOWER	
24	FB5-4728-000		1	COVER, PAPER PICK-UP FRAME	
25	FB5-4779-000		1	ROLLER, PAPER FEED, UPPER	
26	FB5-4780-000		1	ROLLER, PAPER FEED, LOWER	
27	FB5-5286-000		1	CAM, PICK-UP ROLLER, UPPER	
28	FB5-5287-000		1	CAM, PICK-UP ROLLER, LOWER	
29	FF3-2974-000		1	CABLE, UPPER RETRY SENSOR	J1607,16070

COPYRIGHT ©2002 CANON INC.

FIGURE & KEY NO.	PART NUMBER	RANK	Q'TY	DESCRIPTION	SERIAL NUMBER / REMARKS
310 - 30	FF3-2975-000		1	CABLE, LOWER RETRY SENSOR	J1608,16080
31	FF3-4175-000		1	CABLE, VERTICAL PATH CLUTCH	J1603,16030
32	FF5-4552-020		4	ROLLER, PAPER PICK-UP	
33	FF5-4634-020		2	ROLLER, PAPER SEPARATION	
34	FF6-0100-000		1	ARM, TENSION	
35	FH6-1477-000		1	MOTOR, DC24V	M2 J1602
36	FH6-5005-000		1	CLUTCH, ELECTRO MAGNETIC	CL1 J16030
37	FH6-5020-000		1	SOLENOID	SL1 J1604
38	FH7-7462-000		2	PHOTO-INTERRUPTER	PS7,8 J16070,16080
39	FS5-1589-000		1	BUSHING	
40	FS5-1946-000		1	BUSHING	
41	FS5-1948-000		4	BUSHING	
42	FS5-3620-000		1	PULLEY, 32T/40T	
43	FS5-3830-000		1	PULLEY, 25T/GEAR, 28T	
44	FS5-3833-000		1	PULLEY, 24T	
45	FS6-0564-000		2	GEAR, 35T	
46	FS6-0565-000		2	GEAR, 42T	
47	FS7-0758-000		1	GEAR, 14T	
48	FS7-0756-000		1	GEAR, 35T/44T	
49	FS1-9010-000		2	SCREW,STEPPED,M3X2.2	
50	FS7-2414-000		1	SPRING, TENSION	
51	FS6-2328-020		2	SPRING, TENSION	
52	FS6-2330-000		2	SPRING, COMPRESSION	
53	FS6-2331-000		1	SPRING, TENSION	
54	FS6-2900-000		2	SPRING, TENSION	
55	FS7-0103-000		1	GEAR, 35T	
56	FS7-0104-000		1	GEAR, 24T	
57	FS7-0757-000		1	GEAR, 35T	
58	FS7-0752-000		1	GEAR, 86T	
59	FS7-2408-000		1	SPRING, TENSION	

FIGURE & KEY NO.	PART NUMBER	RANK	Q'TY	DESCRIPTION	SERIAL NUMBER / REMARKS
310 - 60	FS7-2409-000		2	SPRING, COMPRESSION	
61	RB1-6539-000		2	DAMPER	
62	FB6-5091-000		2	LIMITER, TORQUE	
63	RB1-6592-000		2	GEAR, 3T	
64	XG9-0455-000		2	BEARING, BALL, DDLF1060ZZ LY13	
65	XA9-0591-000		28	SCREW,M3X8	
66	XD9-0104-000		3	PIN,DOWEL	
67	XD9-0131-000		8	RING,E	
68	XD9-0137-000		2	RING,E	
69	XF2-1121-540		1	BELT, TIMING	
70	XG9-0403-000		2	BEARING, BALL	
71	FB5-4776-000		1	ROLLER, VERTICAL PATH, 1	
72	FB5-4777-000		1	CLUTCH, ONE-WAY	
73	FF6-0108-000		1	HOLDER, ROLLER, UPPER	
74	FF6-0109-000		1	HOLDER, ROLLER, LOWER	
75	FB6-4577-000		1	ARM, LIFTER SUPPORT	
76	XD9-0137-000		2	RING,E	
501	XB1-2300-409		2	SCREW,MACH.,TRUSS HEAD,M3X4	
502	XD1-1106-215		2	SHIM	
503	XB3-6300-800		18	SCREW,RS,M3X8	
504	XD2-2100-802		1	RING,GRIP	
505	XD3-1200-122		4	PIN,SPRING	
506	XD2-2100-402		1	RING,GRIP	

COPYRIGHT ©2002 CANON INC.

FIGURE 315 MULTI FEEDER TRAY ASSEMBLY

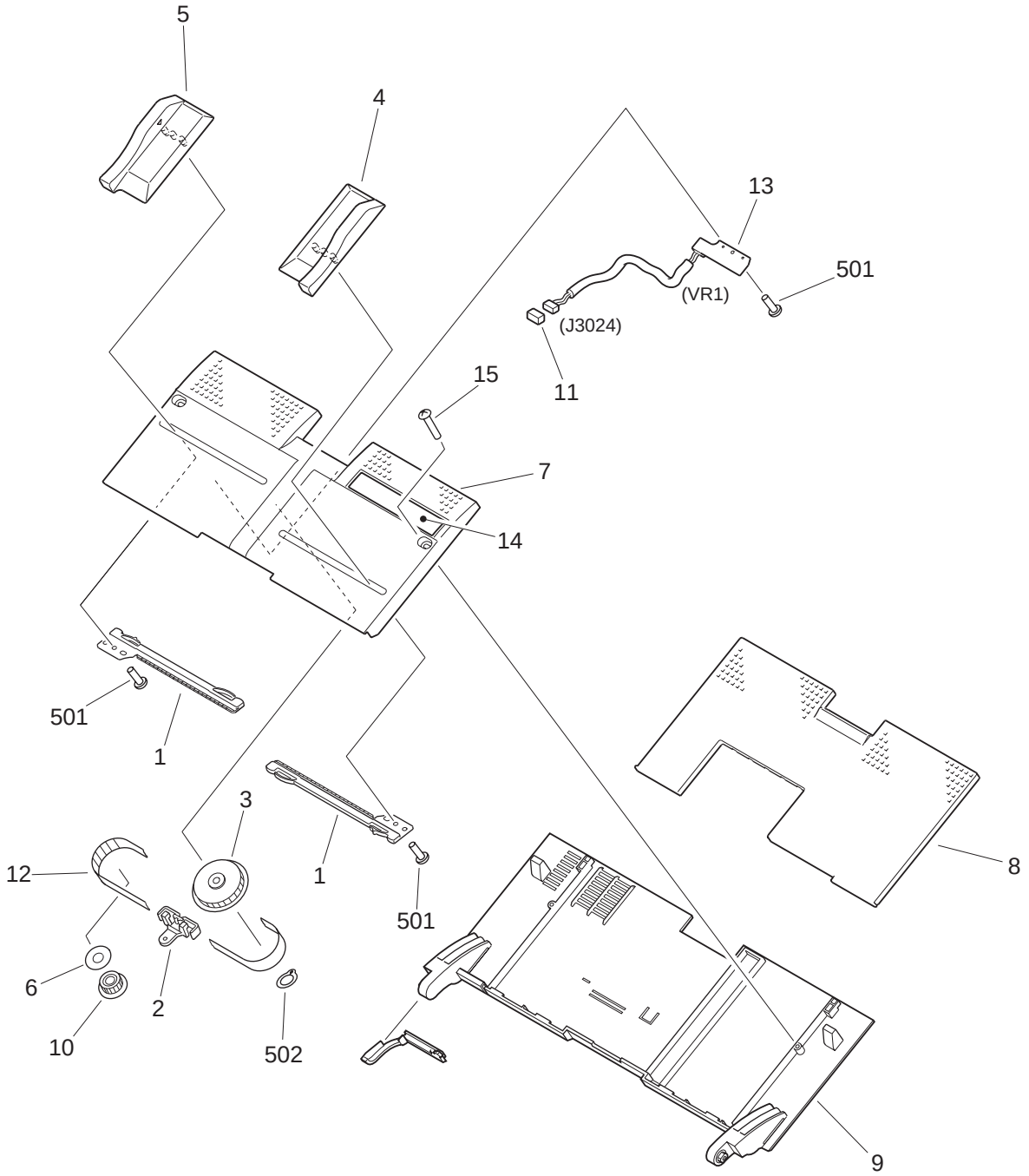

NOTE : This assembly does not include the part shown with key No. 14.

COPYRIGHT © 2002 CANON INC.

FIGURE & KEY NO.	PART NUMBER	RANK	Q'TY	DESCRIPTION	SERIAL NUMBER / REMARKS
315 -	FG6-5649-000		1	MULTI FEEDER TRAY ASSEMBLY	
1	FB1-8619-000		2	RACK	
2	FB1-8621-000		1	PLATE, LOCK	
3	FB1-8625-000		1	GEAR, 18T	
4	FB5-3577-000		1	PLATE, PAPER END, FRONT	
5	FB5-3578-000		1	PLATE, PAPER END, REAR	
6	FB3-2836-000		1	SUPPORT, BELT	
7	FB4-3264-000		1	TRAY, MULTI FEED	
8	FB4-3265-000		1	TRAY, SLIDE	
9	FB5-4745-000		1	PANEL, MULTI FEEDER TRAY	
10	FS5-3177-000		1	PULLEY, IDLER	
11	VS1-5057-003		1	CONNECTOR, SNAP TIGHT	J3024
12	XF9-0393-000		1	BELT, TIMING	
13	FG5-6289-000		1	MULTI PAPER SIZE PCB ASSEMBLY	VR1 J3024
14	FS5-8612-000		1	LABEL, SIZE	AB SIZE SEE NOTE
	FS5-8613-000		1	LABEL, SIZE	AB/INCH SIZE SEE NOTE
	FS5-8614-000		1	LABEL, SIZE	A/INCH SIZE SEE NOTE
	FS5-8615-000		1	LABEL, SIZE	A SIZE SEE NOTE
15	XA9-0606-000		2	SCREW, M4X10	
501	XB4-7300-609		3	SCREW,TAPPING,TRUSS HEAD,M3X6	
502	XD2-2100-502		1	RING,GRIP	

FIGURE 320 REGISTRATION FRONT GUIDE ASSEMBLY

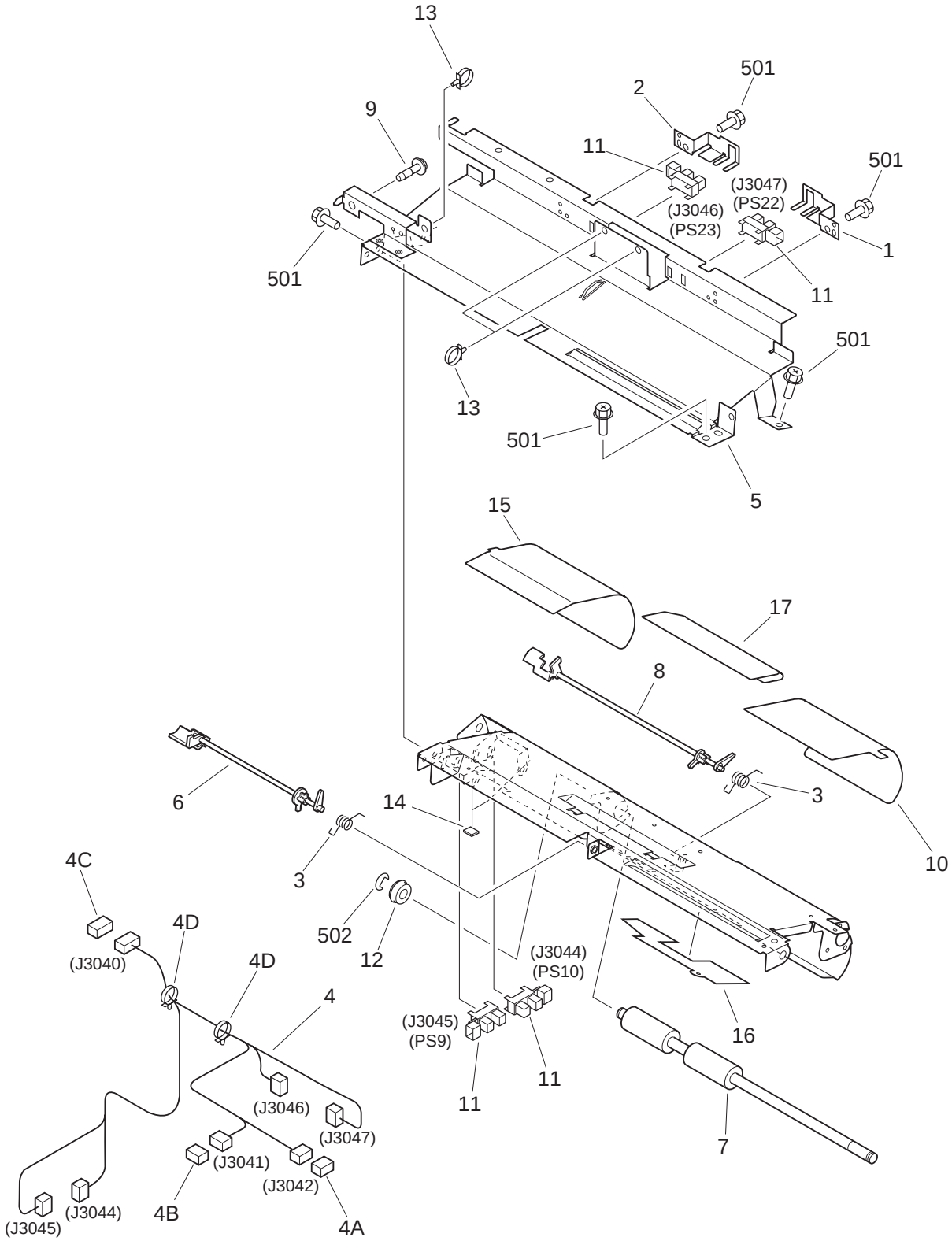

COPYRIGHT ©2002 CANON INC.

FIGURE & KEY NO.	PART NUMBER	RANK	Q'TY	DESCRIPTION	SERIAL NUMBER / REMARKS
320 -	NPN		RF	REGIST. FRONT GUIDE ASSEMBLY	
1	FB3-2648-000		1	PLATE, SENSOR, FRONT	
2	FB3-2649-000		1	PLATE, SENSOR, REAR	
3	FB3-2658-000		2	SPRING, TORSION	
4	FG3-1596-000		1	CABLE, REGISTRATION FRONT	J3040-3042,3044-3047
4A	VS1-5057-003		1	CONNECTOR, SNAP TIGHT	J3042
4B	VS1-5057-006		1	CONNECTOR, SNAP TIGHT	J3041
4C	VS1-6319-024		1	CONNECTOR, SNAP TIGHT	J3040
4D	WT2-5565-000		2	CLAMP, CABLE	
5	FB5-4711-000		1	GUIDE, REGIST. FRONT, UPPER	
6	FB5-4713-000		1	FLAG, REGIST. FRONT SENSOR	
7	FB5-4714-000		1	ROLLER, REGISTRATION FRONT, 2	
8	FB5-5146-000		1	FLAG, REGISTRATION FRONT, 2	
9	FB5-5288-000		1	SCREW,RS,M4X16	
10	FB5-4722-020		1	SHEET, REGISTRATION FRONT, 1	
11	FH7-7462-000		4	PHOTO-INTERRUPTER	PS9,10,22,23 J3045,3044,3047,3046
12	FS5-1949-000		1	BUSHING	
13	WT2-5565-000		3	CLAMP, CABLE	
14	FB5-5150-000		2	RUBBER, NOISE PREVENTION	
15	FB5-5281-000		1	SHEET, REGISTRATION FRONT, 2	
16	FB5-5282-000		1	SHEET, REGISTRATION FRONT, 3	
17	FB5-5283-000		1	SHEET, REGISTRATION FRONT, 4	
501	XB3-6300-800		5	SCREW,RS,M3X8	
502	XD2-1100-502		1	RING,E	

FIGURE 330 PAPER FEEDER ASSEMBLY

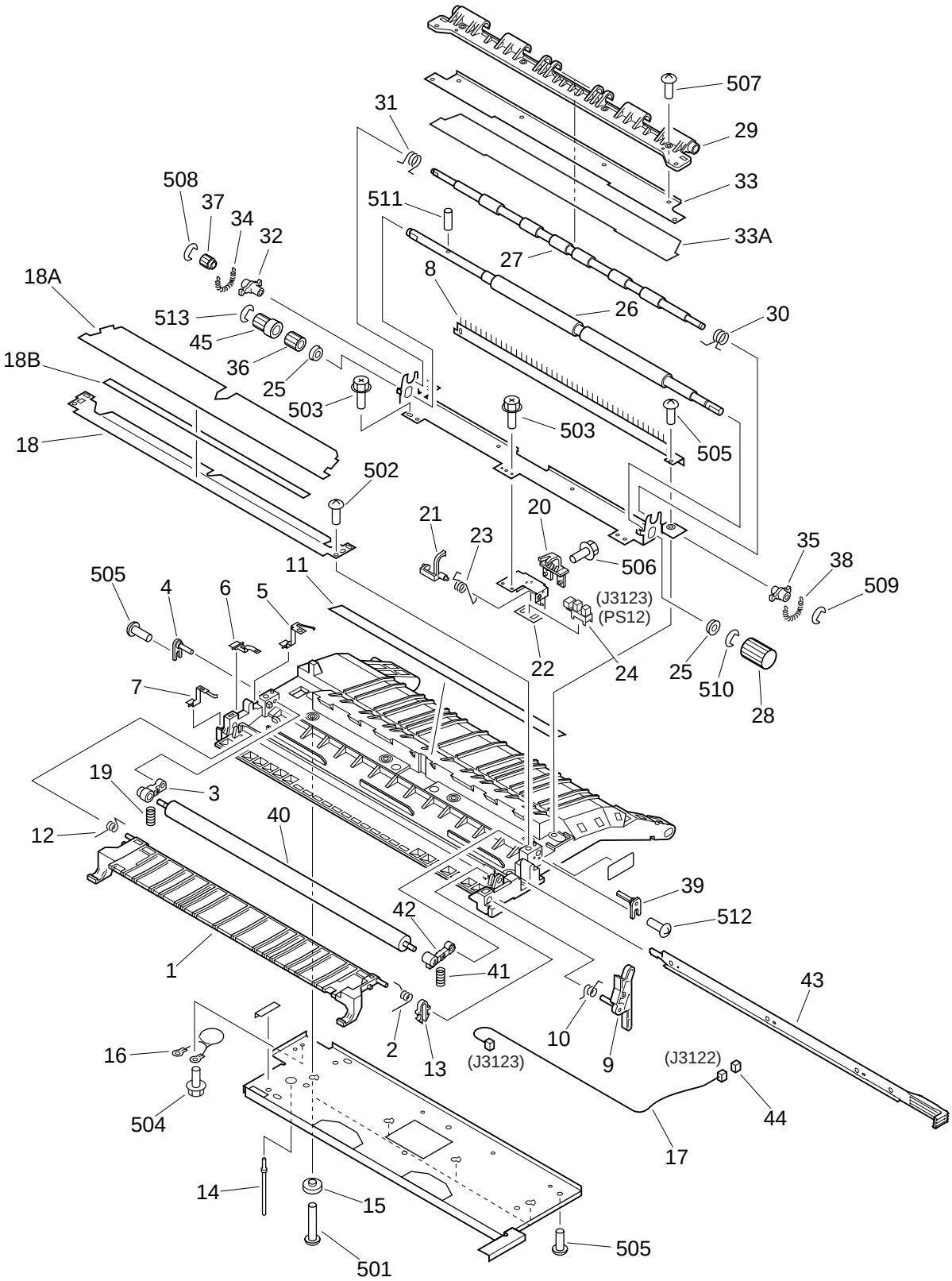

NOTE : This assembly does not include the parts shown with key No. 39, 40, 41, 42, 43, 44, 45, 512, and 513.

COPYRIGHT © 2002 CANON INC.

FIGURE & KEY NO.	PART NUMBER	RANK	Q'TY	DESCRIPTION	SERIAL NUMBER / REMARKS
330 -	FG6-5670-000		1	PAPER FEEDER ASSEMBLY	
1	FB5-4782-000		1	GUIDE, PAPER FEEDER	
2	FB5-4783-000		1	SPRING, TORSION	
3	FB5-4785-000		1	ARM, TRANSFER	
4	FB5-4787-000		1	PIN, POSITIONING	
5	FB5-4788-000		1	TERMINAL PLATE, TRANSFER GUIDE	
6	FB5-4789-000		1	TERMINAL PLATE, TRANSFER	
7	FB5-4790-000		1	TERMINAL PLATE, ELIMINATOR	
8	FB5-4791-000		1	ELIMINATOR, STATIC CHARGE	
9	FB5-4793-000		1	ARM, SHUTTER	
10	FB5-4794-000		1	SPRING, TORSION	
11	FB5-4795-000		1	SHEET, GUIDE	
12	FB5-4796-000		1	SPRING, TORSION	
13	FB5-4798-000		1	HOOK, RIB STOP	
14	FB5-4832-000		1	SHAFT, LIFTER, REAR	
15	FB5-4835-000		4	SPACER, SCREW	
16	FF3-1173-000		1	VARISTOR UNIT	
17	FF3-4179-000		1	CABLE, TOP SENSOR	J3122,3123
18	FF6-0105-000		1	GUIDE, TRANSFER, LOWER	
18A	FB5-4811-000		1	SHEET, TRANSFER	
18B	FB5-4814-000		1	SHEET, TRANSFER AUXILIARY	
19	FS7-2382-000		1	SPRING, COMPRESSION	
20	FB5-4799-000		1	GUIDE, TOP SENSOR	
21	FB5-4800-000		1	LINK, TOP SENSOR	
22	FB5-4801-000		1	HOLDER, TOP SENSOR	
23	FB5-4802-000		1	SPRING, TORSION	
24	FH7-7557-000		1	PHOTO-INTERRUPTER	PS12 J3123
25	FA1-0056-000		2	BUSHING	
26	FB5-4804-000		1	ROLLER, PRE-TRANSFER, LOWER	
27	FB5-4805-000		1	ROLLER, PRE-TRANSFER, UPPER	

FIGURE & KEY NO.	PART NUMBER	RANK	Q'TY	DESCRIPTION	SERIAL NUMBER / REMARKS
330 - 28	FB5-4808-000		1	KNOB, PRE-TRANSFER ROLLER	
29	FB5-4813-000		1	BRACKET, PRE-TRANSFER GUIDE	
30	FB5-4833-000		1	SPRING, TORSION	
31	FB5-4834-000		1	SPRING, TORSION	
32	FE5-4046-000		1	BUSHING, REGIST. ROLLER	
33	FF6-0106-000		1	GUIDE, TRANSFER, UPPER	
33A	FB5-4812-000		1	SHEET, TRANSFER	
34	FS2-2783-000		1	SPRING, TENSION	
35	FS5-1944-000		1	BUSHING	
36	FS7-0739-000		1	GEAR, 32T	
37	FS7-0740-000		1	GEAR, 26T	
38	FS7-2383-000		1	SPRING, TENSION	
39	FB5-4787-000		1	PIN, POSITIONING	SEE NOTE
40	FF6-0104-000		1	ROLLER, TRANSFER	SEE NOTE
41	FS7-2382-000		1	SPRING, COMPRESSION	SEE NOTE
42	FB5-4786-000		1	ARM, TRANSFER, FRONT	SEE NOTE
43	FF5-7246-000		1	ELIMINATOR, STATIC CHARGE	SEE NOTE
44	VS1-5057-003		1	CONNECTOR, SNAP TIGHT	SEE NOTE J3122
45	FS5-3820-000		1	PULLEY, 24T	SEE NOTE
501	XB1-2401-809		4	SCREW,MACH.,TRUSS HEAD,M4X18	
502	XB2-8400-809		2	SCREW,W/WASHER,M4X8	
503	XB3-6300-605		5	SCREW,RS,M3X6	
504	XB3-6400-800		1	SCREW,RS,M4X8	
505	XB4-7400-809		15	SCREW,TAPPING,TRUSS HEAD,M4X8	
506	XB3-6300-605		1	SCREW,RS,M3X6	
507	XB1-2300-409		4	SCREW,MACH.,TRUSS HEAD,M3X4	
508	XD2-1100-322		1	RING,E	
509	XD2-1100-502		1	RING,E	
510	XD2-1100-642		2	RING,E	
511	XD3-2160-102		1	PIN,DOWEL	

COPYRIGHT ©2002 CANON INC.

FIGURE & KEY NO.	PART NUMBER	RANK	Q'TY	DESCRIPTION	SERIAL NUMBER / REMARKS
330 - 512	XB4-7400-809		1	SCREW,TAPPING,TRUSS HEAD,M4X8	SEE NOTE
513	XD2-1100-402		1	RING,E	SEE NOTE

FIGURE 350 PAPER DELIVERY ASSEMBLY

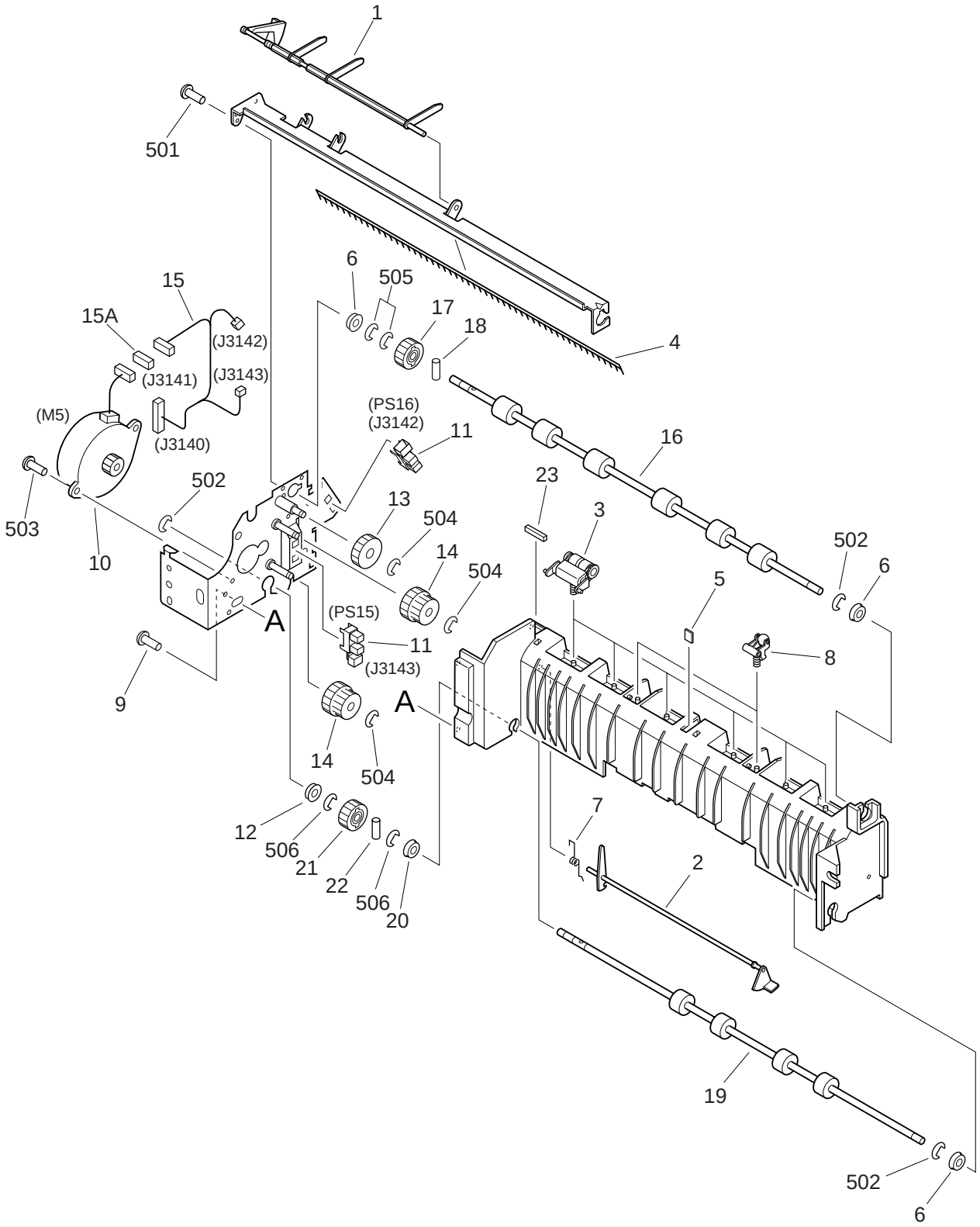

COPYRIGHT ©2002 CANON INC.

FIGURE & KEY NO.	PART NUMBER	RANK	Q'TY	DESCRIPTION	SERIAL NUMBER / REMARKS
350 -	FG6-5691-000		1	PAPER DELIVERY ASSEMBLY	
1	FB5-4853-000		1	LINK, PAPER FULL SENSOR	
2	FB5-4854-000		1	ARM, SENSOR	
3	FF6-0132-000		6	HOLDER, ROLLER	
4	FB5-4858-000		1	ELIMINATOR, STATIC CHARGE	
5	FB5-5150-000		1	RUBBER, NOISE PREVENTION	
6	FS5-1943-000		3	BUSHING	
7	FS7-2390-000		1	SPRING, TORSION	
8	FF6-0345-000		2	DELIVERY COLLAR UNIT	
9	XA9-0605-000		4	SCREW,P,M4X8	
10	FH6-1850-000		1	MOTOR, STEPPING	M5 J3141
11	FH7-7557-000		2	PHOTO-INTERRUPTER	PS15,16 J3143,J3142
12	FS5-1943-000		1	BUSHING	
13	FS7-0746-000		1	GEAR, 21T	
14	FS7-0747-000		2	GEAR, 17T/27T	
15	FG3-1598-000		1	CABLE, PAPER DELIVERY	J3140-3143
15A	VS1-5057-004		1	CONNECTOR, SNAP TIGHT	J3141
16	FB5-4855-000		1	ROLLER, PAPER DELIVERY	
17	FS7-0745-000		1	GEAR, 16T	
18	XD9-0104-000		1	PIN,DOWEL	
19	FB5-4856-000		1	ROLLER, VERTICAL PATH	
20	FS1-1202-000		1	BUSHING	
21	FS7-0744-000		1	GEAR, 16T	
22	XD9-0104-000		1	PIN,DOWEL	
23	FB5-9787-000		1	PAD, NOISE PREVENTION	
501	XB1-2300-805		1	SCREW,MACH.,TRUSS HEAD,M3X8	
502	XD2-1100-502		3	RING,E	
503	XB1-2300-805		2	SCREW,MACH.,TRUSS HEAD,M3X8	
504	XD2-1100-502		3	RING,E	
505	XD2-1100-502		2	RING,E	

FIGURE & KEY NO.	PART NUMBER	RANK	Q'TY	DESCRIPTION	SERIAL NUMBER / REMARKS
350 - 506	XD2-1100-502		2	RING,E	

COPYRIGHT ©2002 CANON INC.

FIGURE 351 LEFT VERTICAL PATH ASSEMBLY

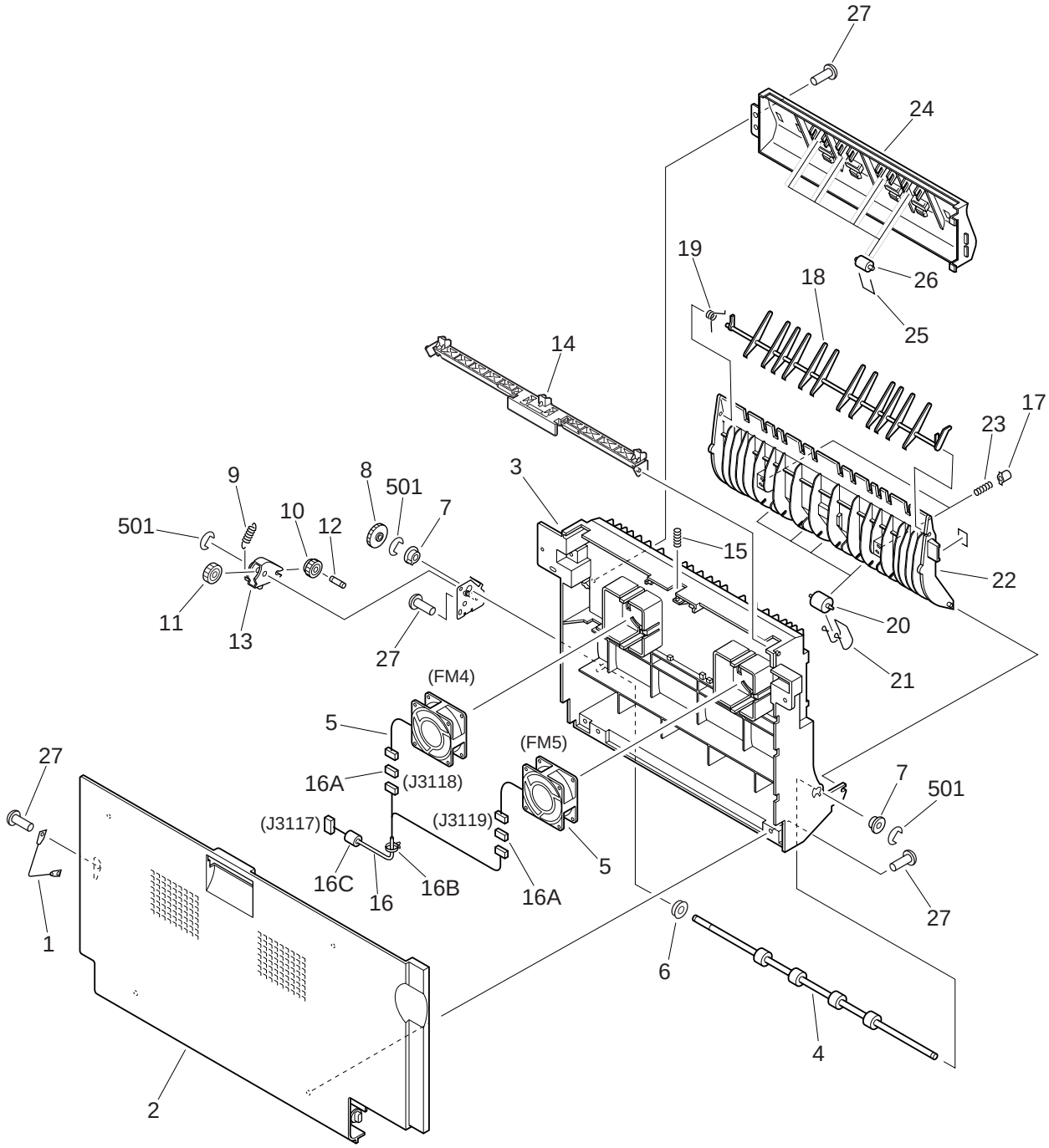

COPYRIGHT ©2002 CANON INC.

FIGURE & KEY NO.	PART NUMBER	RANK	Q'TY	DESCRIPTION	SERIAL NUMBER / REMARKS
351 -	FG6-5698-000		1	LEFT VERTICAL PATH ASSEMBLY	
1	FB1-6841-000		1	WIRE, DELIVERY SUPPORT	
2	FB5-4911-000		1	PANEL, PAPER DELIVERY	
3	FB5-4912-000		1	GUIDE, PAPER DELIVERY	
4	FB5-4919-000		1	ROLLER, DELIVERY DUPLEXING	
5	FH6-1854-000		2	FAN	FM4,5 J3118,3119
6	FS1-1202-000		1	BUSHING	
7	FS5-1943-000		2	BUSHING	
8	FS7-0701-000		1	GEAR, 24T	
9	FS7-2372-000		1	SPRING, TENSION	
10	RA9-1124-000		1	GEAR, 18T	
11	FB6-2767-000		1	GEAR, 19T	
12	RB1-6653-000		1	SHAFT, GEAR	
13	FB6-2768-000		1	LEVER, SWING	
14	FB6-2769-000		1	LEVER, DELIVERY COVER	
15	RS5-2489-000		1	SPRING, COMPRESSION	
16	FG3-1599-000		1	CABLE, CURL CORRECT FAN	J3117-3119
16A	VS1-5057-003		2	CONNECTOR, SNAP TIGHT	J3118,3119
16B	WT2-5565-000		2	CLAMP, CABLE	
16C	WE8-5857-000		1	CORE, FERRITE	
17	FB4-3104-000		2	CAP, SPRING	
18	FB5-4914-000		1	DEFLECTOR, DELIVERY INLET	
19	FB5-4915-000		1	SPRING, TORSION	
20	FB5-5260-000		4	COLLAR, DUPLEXING INLET	
21	FB5-5261-000		4	SPRING, TORSION	
22	FF6-0139-000		1	GUIDE, PAPER DELIVERY, LOWER	
23	FS7-2398-000		2	SPRING, COMPRESSION	
24	FB5-4916-000		1	GUIDE, VERTICAL PATH	
25	FB5-4918-000		4	HOOK, PAPER DELIVERY ROLLER	
26	FB5-4920-000		4	ROLLER, FEED	

FIGURE & KEY NO.	PART NUMBER	RANK	Q'TY	DESCRIPTION	SERIAL NUMBER / REMARKS
351 - 27	XA9-0605-000		7	SCREW,P,M4X8	
501	XD2-1100-502		3	RING,E	

COPYRIGHT ©2002 CANON INC.

FIGURE 360 DUPLEXING FEEDER ASSEMBLY

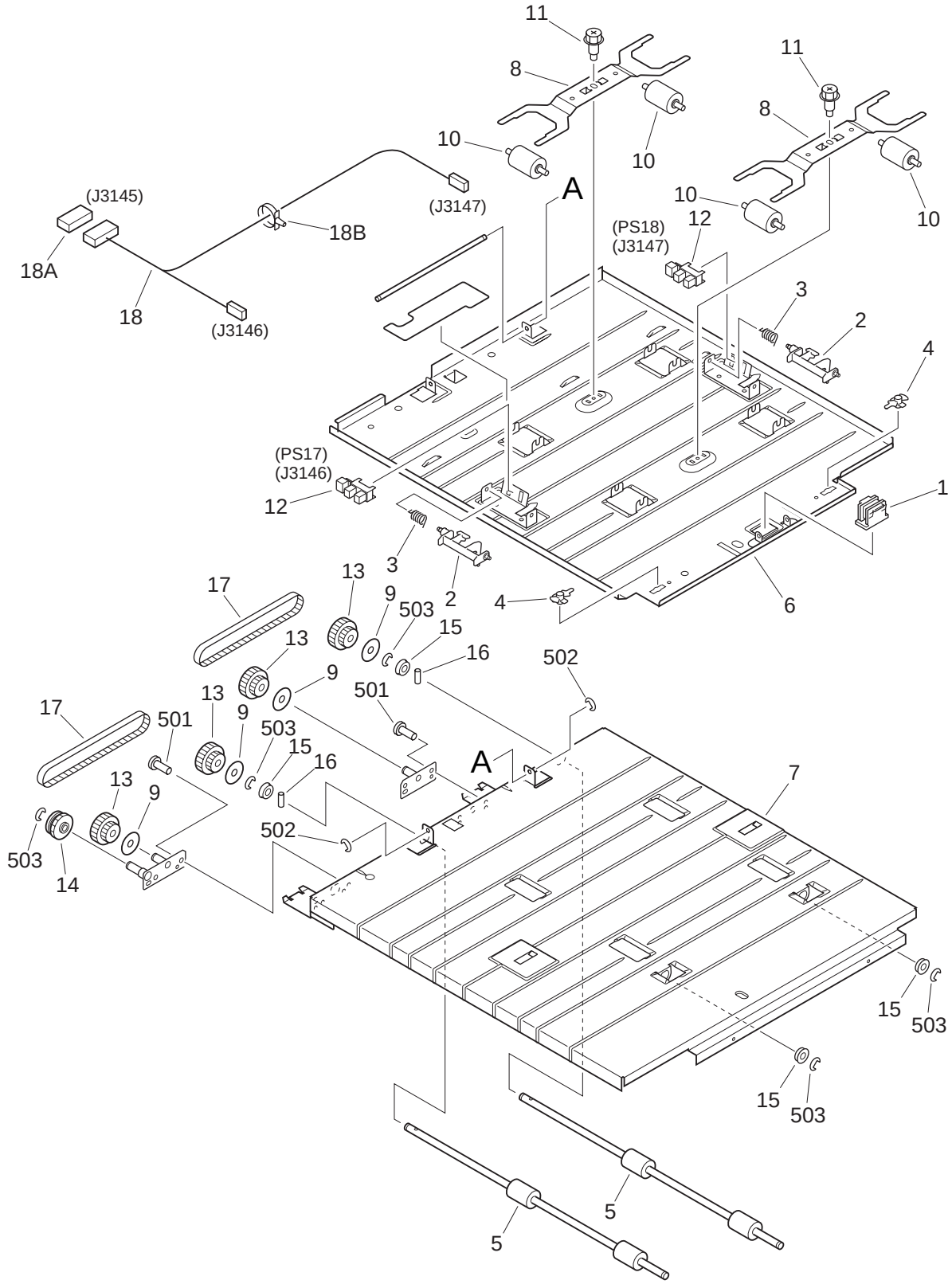

COPYRIGHT ©2002 CANON INC.

FIGURE & KEY NO.	PART NUMBER	RANK	Q'TY	DESCRIPTION	SERIAL NUMBER / REMARKS
360 -	FG6-5650-000		1	DUPLEXING FEEDER ASSEMBLY	
1	FB3-2997-000		1	MAGNET, CATCH	
2	FB6-2784-000		2	FLAG, DUPLEXING P. FEED SENSOR	
3	FB4-2935-000		2	SPRING, TORSION	
4	FB4-2955-000		2	SPACER, GUIDE	
5	FB5-4747-000		2	ROLLER, DUPLEXING FEEDER	
6	FB5-4748-000		1	GUIDE, DUPLEXING FEEDER, UPPER	
7	FB5-4749-000		1	GUIDE, DUPLEXING FEEDER, LOWER	
8	FB5-4750-000		2	SPRING, LEAF	
9	FB5-4754-000		4	SPACER	
10	FB5-4773-000		4	ROLLER, DUPLEXING	
11	FS5-9664-000		2	SCREW,RS STEPPED,M3	
12	FH7-7462-000		2	PHOTO-INTERRUPTER	PS17,18 J3146,3147
13	FS7-0722-000		4	PULLEY, 26T/GEAR, 24T	
14	FS7-0723-000		1	GEAR, 20T	
15	XG9-0482-000		4	BUSHING	
16	XD9-0103-000		2	PIN,DOWEL	
17	XF2-3112-940		2	BELT, TIMING	
18	FG3-1597-000		1	CABLE, DUPLEXING FEEDER	J3145-3147
18A	VS1-5057-006		1	CONNECTOR, SNAP TIGHT	J3145
18B	WT2-5565-000		1	CLAMP, CABLE	
501	XB3-6300-600		4	SCREW,RS,M3X6	
502	XD2-1100-242		2	RING,E	
503	XD2-1100-502		5	RING,E	

FIGURE 460 SCANNER ASSEMBLY

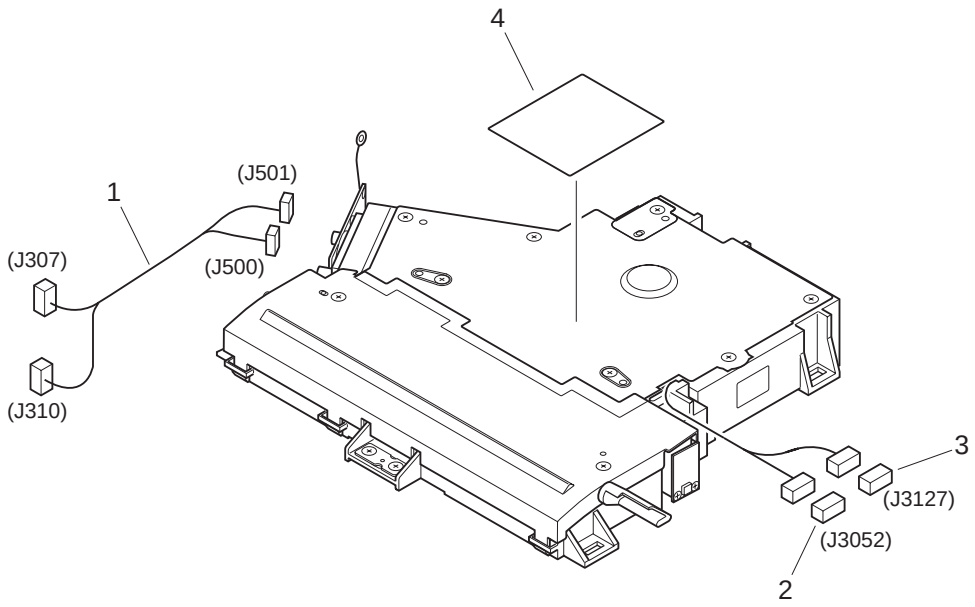

FIGURE & KEY NO.	PART NUMBER	RANK	Q'TY	DESCRIPTION	SERIAL NUMBER / REMARKS
460 -	FG6-5633-000		1	SCANNER ASSEMBLY	
1	FG3-1592-000		1	CABLE, LASER	J307,310,500,501
2	VS1-5057-002		1	CONNECTOR, SNAP TIGHT	J3052
3	VS1-5057-003		1	CONNECTOR, SNAP TIGHT	J3127
4	RS6-8382-000		1	LABEL, "WARNING LASER"	

COPYRIGHT ©2002 CANON INC.

FIGURE 500 DRUM CARTRIDGE ASSEMBLY

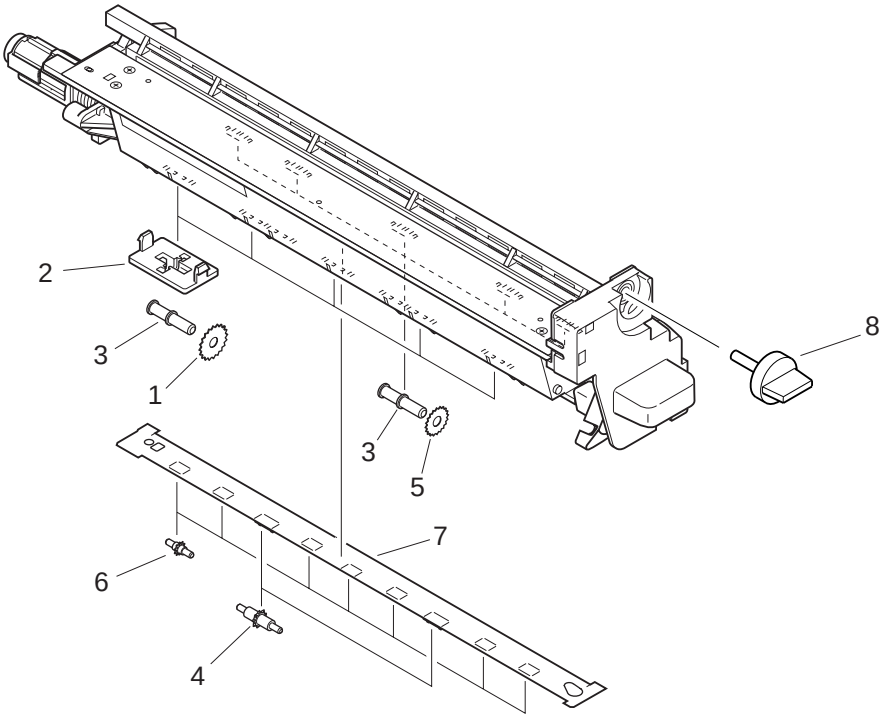

FIGURE & KEY NO.	PART NUMBER	RANK	Q'TY	DESCRIPTION	SERIAL NUMBER / REMARKS
500 -	NPN		RF	DRUM CARTRIDGE ASSEMBLY	
1	FB5-4986-000		5	ROWEL, 1	
2	FB5-5019-000		5	HOLDER, ROWEL, 1	
3	FB5-5269-000		10	SHAFT, ROWEL	
4	FB5-5270-000		2	ROWEL, 2	
5	FB5-5273-000		5	ROWEL, 3	
6	FB5-5279-000		7	ROWEL, 4	
7	FF6-0160-000		1	SHEET, CONTAINER, LOWER	
8	FA6-5618-000		1	KNOB, CARTRIDGE	

FIGURE 640 DEVELOPING ASSEMBLY

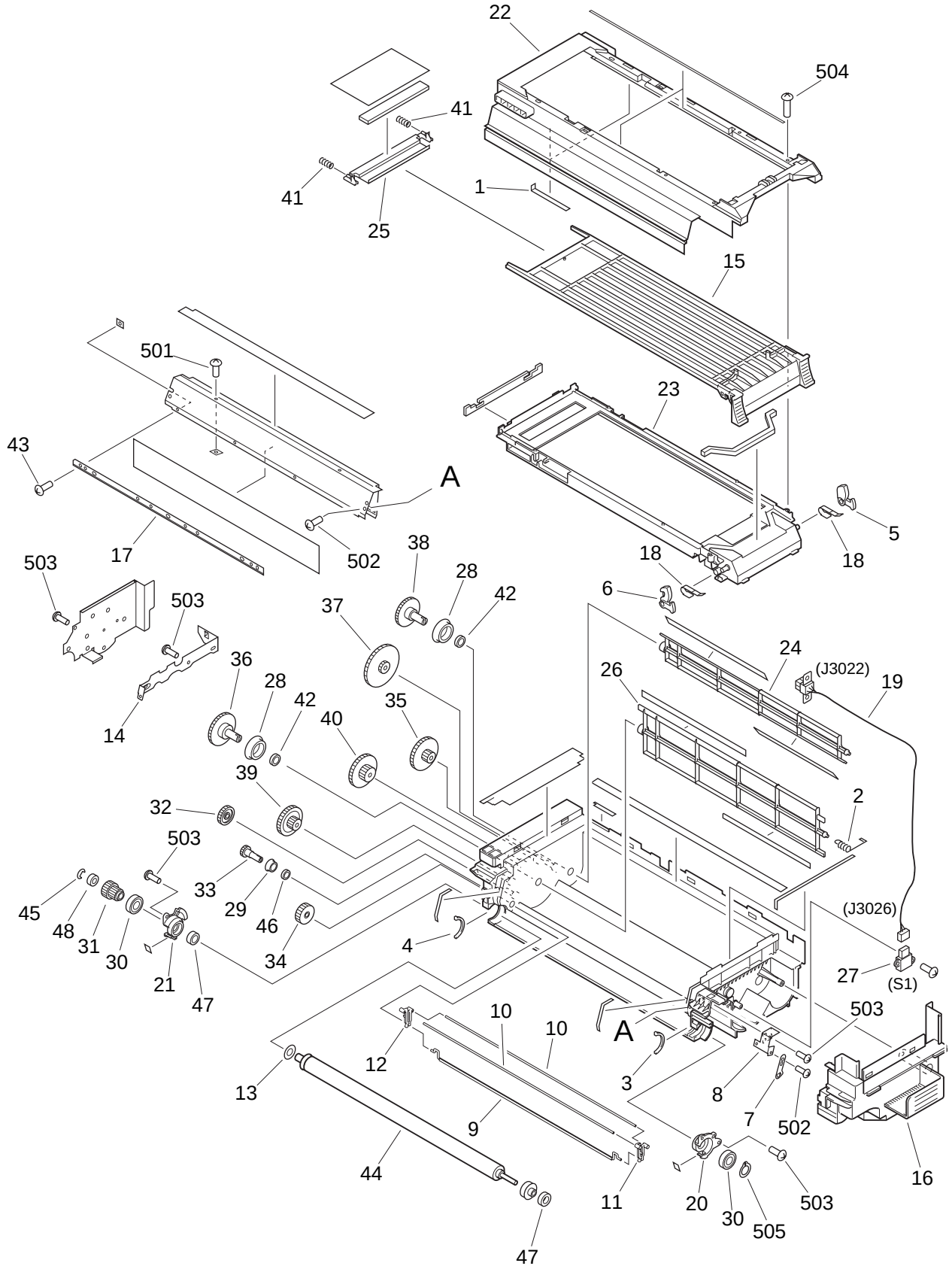

COPYRIGHT ©2002 CANON INC.

FIGURE & KEY NO.	PART NUMBER	RANK	Q'TY	DESCRIPTION	SERIAL NUMBER / REMARKS
640 -	FG6-5713-000		1	DEVELOPING ASSEMBLY	
1	FB1-5816-000		2	SPRING, LEAF	
2	FB1-6710-000		1	SPRING, COMPRESSION	
3	FB1-6718-000		1	SEAL, FRONT	
4	FB1-6719-000		1	SEAL, REAR	
5	FB1-7218-000		1	CARTRIDGE LOCK, RIGHT	
6	FB1-7219-000		1	CARTRIDGE LOCK, LEFT	
7	FB1-8130-000		1	PLATE, POSITIONING	
8	FB3-2672-000		1	PLATE, TERMINAL, FRONT	
9	FB3-2679-000		1	ROD, STIRRING	
10	FB3-2712-000		2	SHAFT, AUXILIARY	
11	FB4-3057-000		1	SUPPORT, STIRRING, FRONT	
12	FB4-3058-000		1	SUPPORT, STIRRING, REAR	
13	FB4-3355-000		1	SHEET, HOLE BLANKING	
14	FB5-4953-000		1	PLATE, BIAS	
15	FB5-4965-000		1	COVER, SLIDE	
16	FB5-4966-000		1	COVER, DEVELOPING, FRONT	
17	FB5-4968-000		1	BLADE	
18	FE5-4134-000		2	SPRING, LEAF	
19	FF3-4188-000		1	CABLE, TONER SENSOR	J3022,3026
20	FF5-4480-000		1	HOLDER, SLEEVE, FRONT	
21	FF5-4481-000		1	HOLDER, SLEEVE, REAR	
22	FF6-0153-000		1	COVER, HOPPER, UPPER	
23	FF6-0154-000		1	COVER, HOPPER, LOWER	
24	FF6-0155-000		1	STIRRER, 3	
25	FF6-0156-000		1	COVER, BUFFER	
26	FF6-0157-000		1	STIRRER, 2	
27	FH7-7422-000		1	SENSOR, TONER	S1 J3026
28	FS1-1594-000		2	BUSHING	
29	FS5-1212-000		1	BUSHING	

FIGURE & KEY NO.	PART NUMBER	RANK	Q'TY	DESCRIPTION	SERIAL NUMBER / REMARKS
640 - 30	FS5-6448-000		2	ROLLER, 1	
31	FS6-0552-000		1	GEAR, 20T	
32	FS6-0579-000		1	GEAR, 26T	
33	FS6-0592-000		1	GEAR, 14T	
34	FS7-0717-000		1	GEAR, 28T	
35	FS7-0718-000		1	GEAR, 15T/48T	
36	FS7-0719-000		1	GEAR, 17T/48T	
37	FS7-0720-000		1	GEAR, 15T/65T	
38	FS7-0721-000		1	GEAR, 40T	
39	FS7-0754-000		1	GEAR, 20T/48T	
40	FS7-0755-000		1	GEAR, 15T/43T	
41	FS7-2405-000		2	SPRING, COMPRESSION	
42	X71-9310-000		2	SEAL, OIL	
43	XA9-0714-000		4	SCREW,M3X4	
44	FG6-5714-000		1	DEVELOPING CYLINDER UNIT	
45	XD9-0131-000		1	RING,E	
46	XG9-0111-000		1	SEAL, OIL	
47	XG9-0218-000		2	BEARING, BALL	
48	XG9-0262-000		1	BEARING, BALL	
501	XB1-2300-409		2	SCREW,MACH.,TRUSS HEAD,M3X4	
502	XB1-2300-805		3	SCREW,MACH.,TRUSS HEAD,M3X8	
503	XB4-7300-809		13	SCREW,TAPPING,TRUSS HEAD,M3X8	
504	XB4-7301-609		4	SCREW,TAPPING,TRUSS HEAD,M3X16	
505	XD2-2100-802		1	RING,GRIP	

COPYRIGHT ©2002 CANON INC.

FIGURE 810 FIXING ASSEMBLY

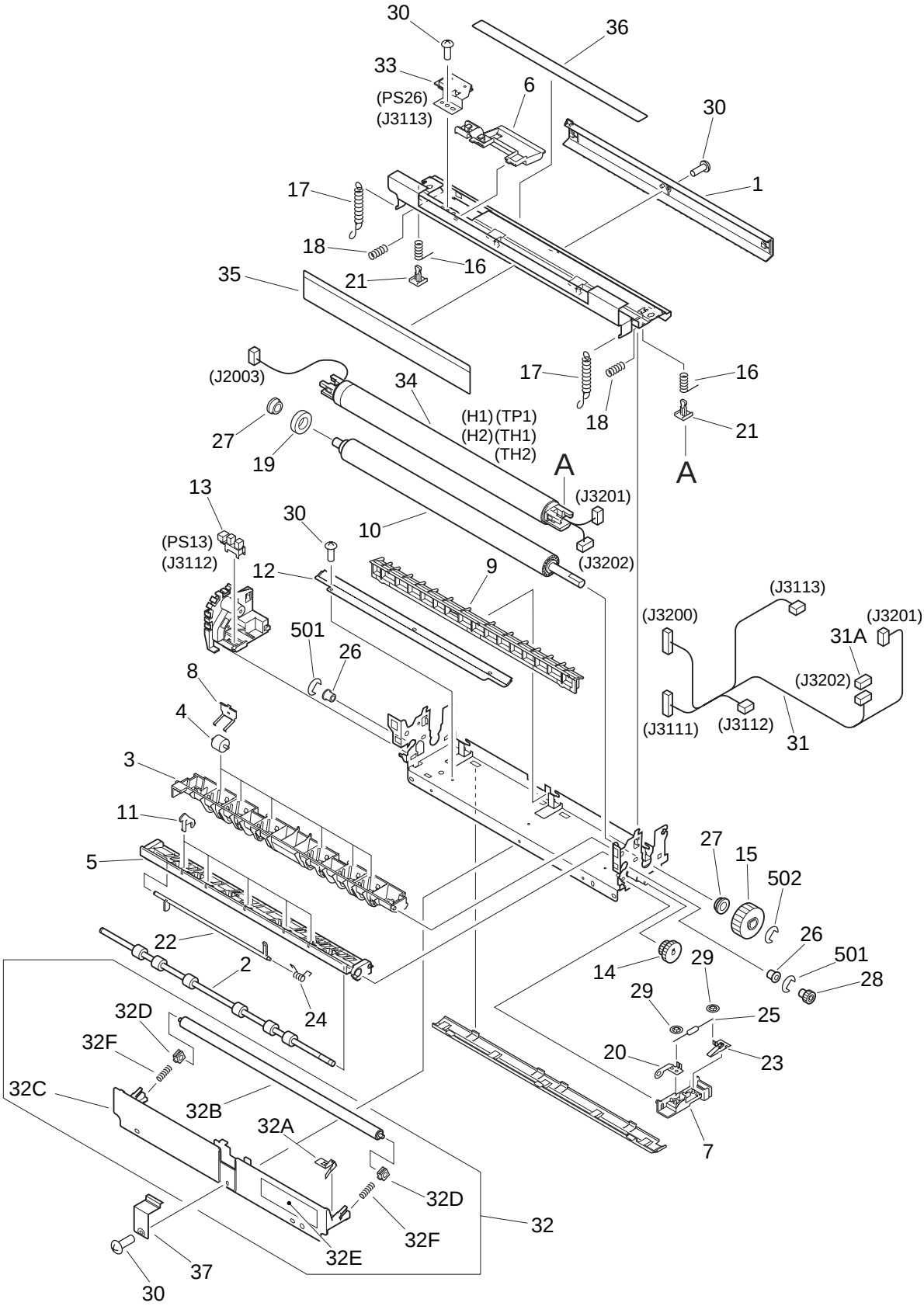

COPYRIGHT ©2002 CANON INC.

FIGURE & KEY NO.	PART NUMBER	RANK	Q'TY	DESCRIPTION	SERIAL NUMBER / REMARKS
810 -	FG6-5702-000		1	FIXING ASSEMBLY	100V
	FG6-6038-000		1	FIXING ASSEMBLY	120V
	FG6-6040-000		1	FIXING ASSEMBLY	220/240V
1	FB5-4923-000		1	GUIDE, INLET, UPPER	
2	FB5-4925-000		1	ROLLER, FIXING DELIVERY	
3	FB5-4926-000		1	GUIDE, FIXING DELIVERY, UPPER	
4	FB5-4927-000		6	COLLAR, FIXING DELIVERY	
5	FB5-4928-000		1	GUIDE, FIXING DELIVERY, LOWER	
6	FB5-4934-000		1	COVER, FILM SENSOR	
7	FB5-4938-000		1	MOUNT, FILM BIAS	
8	FB5-4940-000		6	SPRING, LEAF	
9	FB5-4941-000		1	GUIDE, INLET	
10	FB5-4942-000		1	ROLLER, PRESSURE	
11	FB5-4943-000		5	RIB, FIXING GUIDE, LOWER	
12	FB5-5148-000		1	ELIMINATOR, STATIC CHARGE	
13	FH7-7462-000		1	PHOTO-INTERRUPTER	PS13 J3112
14	FS7-0708-000		1	GEAR, 17T/19T	
15	FS7-0709-000		1	GEAR, 27T	
16	FS7-2373-000		2	SPRING, COMPRESSION	
17	FS7-2374-000		2	SPRING, TENSION	
18	FS7-2375-000		2	SPRING, COMPRESSION	
19	RB2-1920-000		1	RUBBER	
20	RB2-1929-000		1	SPRING, LEAF	
21	RB2-1930-000		2	PIN	
22	FB6-2860-000		1	LEVER, SENSOR	
23	RB2-1947-000		1	SPRING, LEAF	
24	RB2-4389-000		1	SPRING, TORSION	
25	RH5-3058-000		1	RESISTOR, 68MOHM, 1/2W	
26	RS1-1087-000		2	BUSHING	
27	RS5-1446-000		2	BUSHING	

FIGURE & KEY NO.	PART NUMBER	RANK	Q'TY	DESCRIPTION	SERIAL NUMBER / REMARKS
810 - 28	RS6-0354-000		1	GEAR, 15T	
29	XA9-0134-000		2	NUT, PUSH	
30	XA9-0702-000		8	SCREW,M3	
31	FG3-1600-000		1	CABLE, FIXING, DC	J3111-3113,3200-3202
31A	VS1-5057-002		1	CONNECTOR, SNAP TIGHT	J3202
32	FG6-5709-000		1	CLEANING ROLLER ASSEMBLY	
32A	FB5-4930-000		1	PLATE, CLEANING ROLLER	
32B	FB5-4931-000		1	ROLLER, FIXING HEATSINK	
32C	FB5-4932-000		1	MOUNT, CLEANING ROLLER	
32D	FS5-1945-000		2	BUSHING	
32E	FS7-8267-000		1	LABEL, CAUTION	
32F	RS6-2192-000		2	SPRING, COMPRESSION	
33	FG6-5710-000		1	FIXING FILM SENSOR PCB ASS'Y	PS26 J3113
34	FG6-5712-000		1	FIXING FILM ASSEMBLY	100V H1,H2,TP1,TH1,TH2 J2003,3201,3202
	FG6-6039-000		1	FIXING FILM ASSEMBLY	120V H1,H2,TP1,TH1,TH2 J2003,3201,3202
	FG6-6041-000		1	FIXING FILM ASSEMBLY	220/240V H1,H2,TP1,TH1,TH2 J2003,3201,3202
35	FB5-4929-000		1	SHEET, FIXING	
36	FB5-4948-000		1	SHEET, FIXING, 2	
37	FB5-4944-000		1	REINFORCEMENT, FIXING GUIDE	
501	XD2-1100-502		2	RING,E	
502	XD2-1100-642		1	RING,E	

COPYRIGHT ©2002 CANON INC.

FIGURE 900 CONTROLLER BOX ASSEMBLY

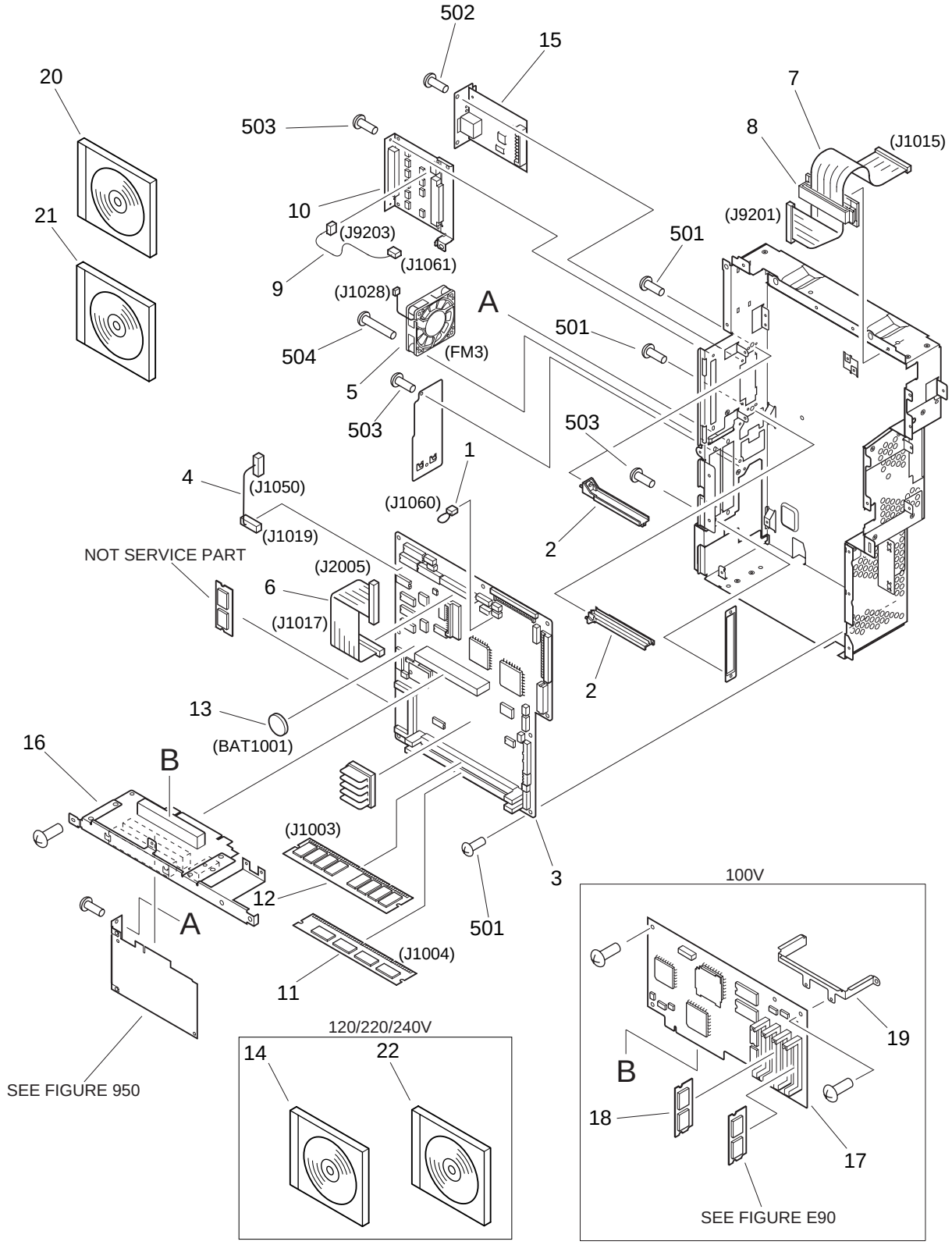

COPYRIGHT ©2002 CANON INC.

FIGURE & KEY NO.	PART NUMBER	RANK	Q'TY	DESCRIPTION	SERIAL NUMBER / REMARKS
900 -	NPN		RF	CONTROLLER BOX ASSEMBLY	
1	FF3-4199-000		1	CABLE, CC-4	J1060
2	RB1-7067-000		2	RAIL, GUIDE	
3	FG3-2232-000		1	MAIN CONTROLLER PCB ASSEMBLY	
4	FF3-4197-000		1	CABLE, CENTRO	J1019,1050
5	FH6-1885-000		1	FAN	FM3 J1028
6	FF3-4191-000		1	CABLE, FLAT, HD	J1017,2005
7	FG3-1994-000		1	CABLE, FLAT	J1015,9201
8	WE8-5925-000		1	CORE, FERRITE	
9	FG3-2238-000		1	CABLE, POWER SUPPLY	J1061,9203
10	FG6-5831-000		1	DIFFERENTIAL PCB ASSEMBLY	
11	WA7-1497-000		1	DIMM, MT4LSDT864AG-133	J1004
12	WA7-1780-000		1	DIMM ASSEMBLY	J1003
13	WK1-5019-000		1	BATTERY,LITHIUM,CR2477-HE4H,3V	BAT1001
14	FA7-3568-000		1	CD-ROM, USER MANUAL	120V
	FA7-3569-000		1	CD-ROM, USER MANUAL	220/240V
15	FG6-5964-000		1	ETHERNET BOARD PCB ASSEMBLY	
16	FG6-5795-000		1	RISER BOARD PCB ASSEMBLY	
17	FG3-2959-000		1	LIPS BOARD PCB ASSEMBLY	100V
18	FH5-3127-000		1	DIMM ASS'Y	100V
19	FB5-6612-000		1	PLATE, PCB FIXING	100V
20	FG3-2772-000		1	CD-ROM, USER SOFTWARE	100V
	FH5-3326-000		1	CD-ROM, USER SOFTWARE	120V
	FG3-2478-000		1	CD-ROM, USER SOFTWARE	220/240V
21	FG3-2481-000		1	CD-ROM, N/W SCANGEAR	100V
	FH5-3330-000		1	CD-ROM, N/W SCANGEAR	120/220/240V
22	FH5-3278-000		1	CD-ROM, FAX DRIVER	120V
	FH5-3279-000		1	CD-ROM, FAX DRIVER	220/240V
501	XB1-2300-607		10	SCREW,MACH.,TRUSS HEAD,M3X6	
502	XB4-7400-807		2	SCREW,TAPPING,TRUSS HEAD,M4X8	

FIGURE & KEY NO.	PART NUMBER	RANK	Q'TY	DESCRIPTION	SERIAL NUMBER / REMARKS
900 - 503	XB1-2300-607		8	SCREW,MACH.,TRUSS HEAD,M3X6	
504	XB1-2402-007		2	SCREW,MACH.,TRUSS HEAD,M4X20	
IC1003	FH4-6123-000		1	IC, M38871M2-010GP, MCU	
IC1005	FH4-6145-000		1	IC, GATE ARRAY	
IC1009	FH4-6085-000		1	IC, SLA902FM2J, GATE ARRAY	

COPYRIGHT ©2002 CANON INC.

FIGURE 910 HV POWER SUPPLY PCB ASSEMBLY

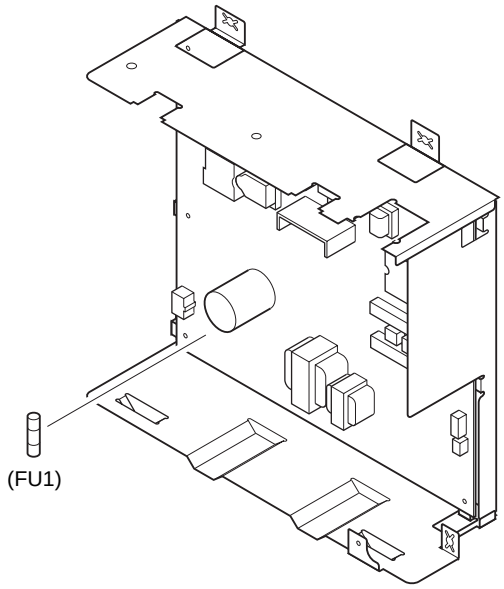

FIGURE & KEY NO.	PART NUMBER	RANK	Q'TY	DESCRIPTION	SERIAL NUMBER / REMARKS
910 -	FG3-1603-000		1	HV POWER SUPPLY PCB ASSEMBLY	100/120V
	FG3-1604-000		1	HV POWER SUPPLY PCB ASSEMBLY	220/240V
FU1	VD7-0213-151		1	FUSE, 125V, 3.15A	100/120V
	VD7-0641-601		1	FUSE, 250V, 1.6A	220/240V

FIGURE 920 CONTROL PANEL CPU PCB ASSEMBLY

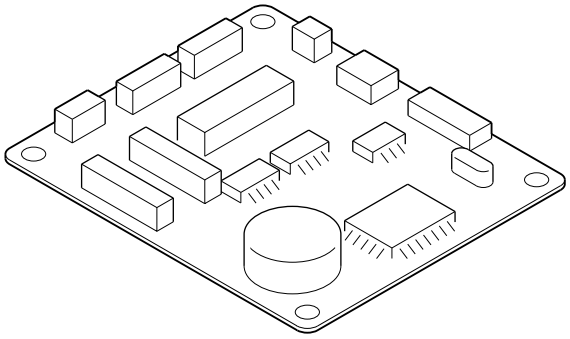

NOTE : This assembly is included in the assembly shown in Figure 130.

FIGURE & KEY NO.	PART NUMBER	RANK	Q'TY	DESCRIPTION	SERIAL NUMBER / REMARKS
920 -	FG3-1795-000		1	CONTROL PANEL CPU PCB ASSEMBLY	SEE NOTE
Q6822	FH4-1380-000		1	IC, N010-0559-V123, MPU	

COPYRIGHT ©2002 CANON INC.

FIGURE 921 CONTROL PANEL INVERTER PCB ASSEMBLY

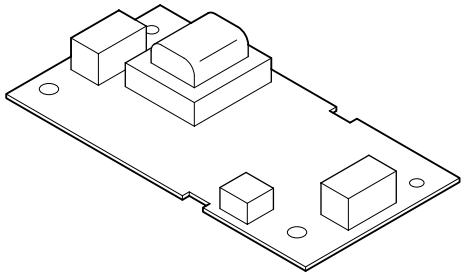

NOTE : This assembly is included in the assembly shown in Figure 130.

FIGURE & KEY NO.	PART NUMBER	RANK	Q'TY	DESCRIPTION	SERIAL NUMBER / REMARKS
921 -	FG6-7738-000		1	C. PANEL INVERTER PCB ASSEMBLY	SEE NOTE
FU1	VD7-1622-001		1	FUSE, 60V, 2A	
T1	FH3-0961-000		1	TRANSFORMER, INVERTER	

FIGURE 930 DC CONTROLLER PCB ASSEMBLY

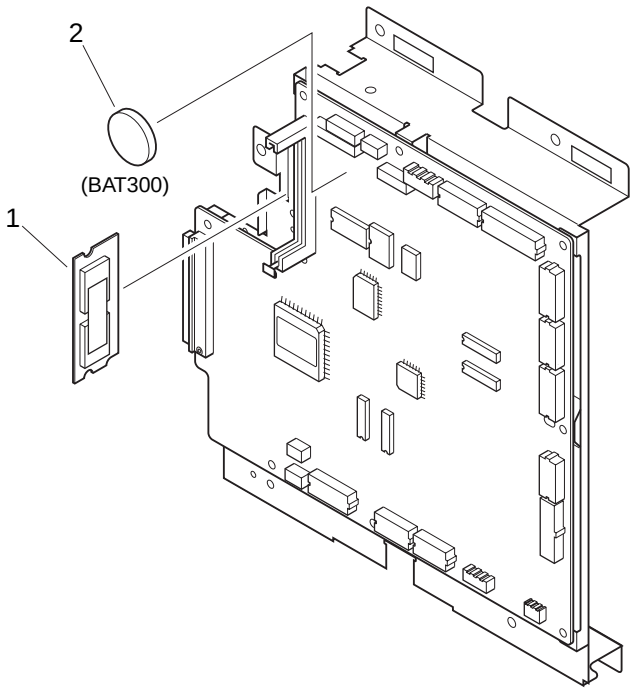

FIGURE & KEY NO.	PART NUMBER	RANK	Q'TY	DESCRIPTION	SERIAL NUMBER / REMARKS
930 -	FG3-1612-000		1	DC CONTROLLER PCB ASSEMBLY	100/120V
	FG3-1613-000		1	DC CONTROLLER PCB ASSEMBLY	220/240V
1	FG3-1620-050		1	DIMM ASSEMBLY	
2	WK1-0084-000		1	BATTERY, 3V, 550 MAH	BAT300
FU300	VD7-0602-001		1	FUSE, 72V, 2A	
FU301	VD7-0602-001		1	FUSE, 72V, 2A	
FU302	VD7-0602-501		1	FUSE, 72V, 2.5A	
FU303	VD7-0602-001		1	FUSE, 72V, 2A	
FU304	VD7-0602-001		1	FUSE, 72V, 2A	
IC309	FH4-6123-000		1	IC, M38871M2-010GP, MCU	
IC315	FH4-6001-000		1	IC, MTD2003B-4101, DRIVER	
IC316	FH4-6001-000		1	IC, MTD2003B-4101, DRIVER	
IC334	FH4-6141-000		1	IC, KS4H9U1219WEP, GATE ARRAY	

COPYRIGHT ©2002 CANON INC.

FIGURE 940 PAPER PICK-UP PCB ASSEMBLY

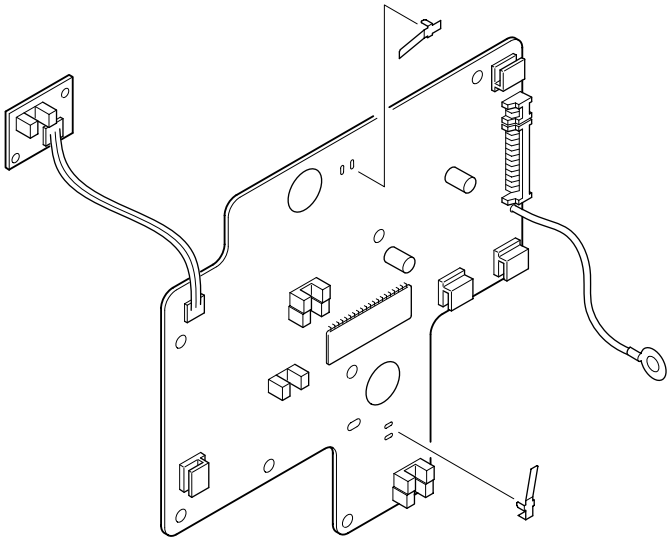

FIGURE & KEY NO.	PART NUMBER	RANK	Q'TY	DESCRIPTION	SERIAL NUMBER / REMARKS
940 -	FG6-0455-000		1	PAPER PICK-UP PCB ASSEMBLY	
FU1601	VD7-0792-501		1	FUSE, 125V, 2.5A	
IC1601	FH4-6002-000		1	IC, MTD2003B-4102, DRIVER	
Q1604	FH9-0585-000		1	PHOTO-INTERRUPTER	
Q1605	FH9-0585-000		1	PHOTO-INTERRUPTER	
Q1606	FH9-0585-000		1	PHOTO-INTERRUPTER	
Q1607	FH9-0585-000		1	PHOTO-INTERRUPTER	
Q1608	FH9-0585-000		1	PHOTO-INTERRUPTER	
Q1609	FH9-0585-000		1	PHOTO-INTERRUPTER	

FIGURE 950 RESOLUTION CONVERSION PCB ASSEMBLY

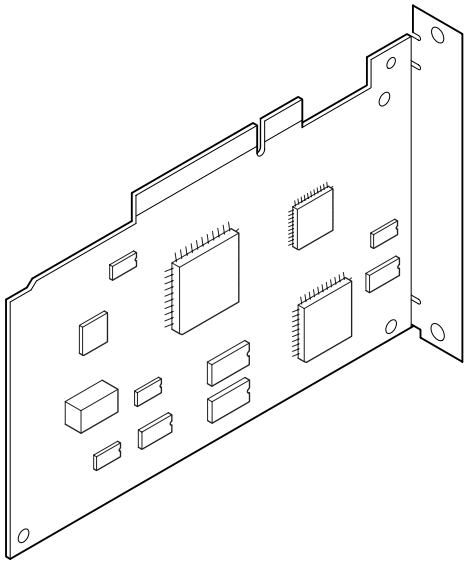

FIGURE & KEY NO.	PART NUMBER	RANK	Q'TY	DESCRIPTION	SERIAL NUMBER / REMARKS
950 -	FG6-6069-000		1	RESOLUTION CONV. PCB ASSEMBLY	
IC3	FH4-6208-000		1	IC, EPM7032AETC44-4, ASIC	
IC4	FH4-6152-000		1	IC, MB87L1791, GATE ARRAY	
IC8	FH4-6072-000		1	IC, UPD65948GN-053-LMU	

COPYRIGHT ©2002 CANON INC.

FIGURE B1 LIST OF CONNECTORS (1/3)

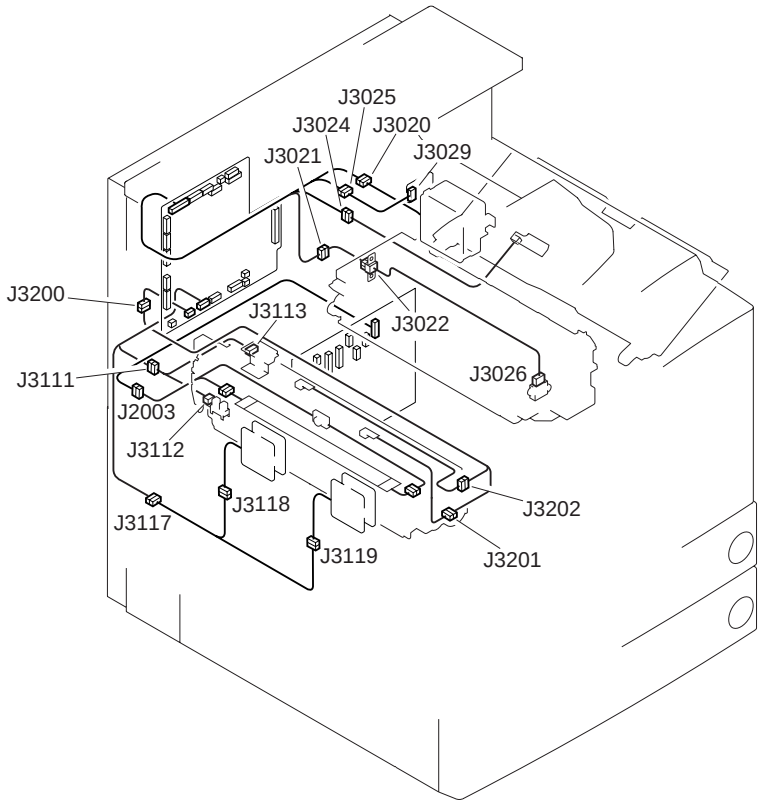

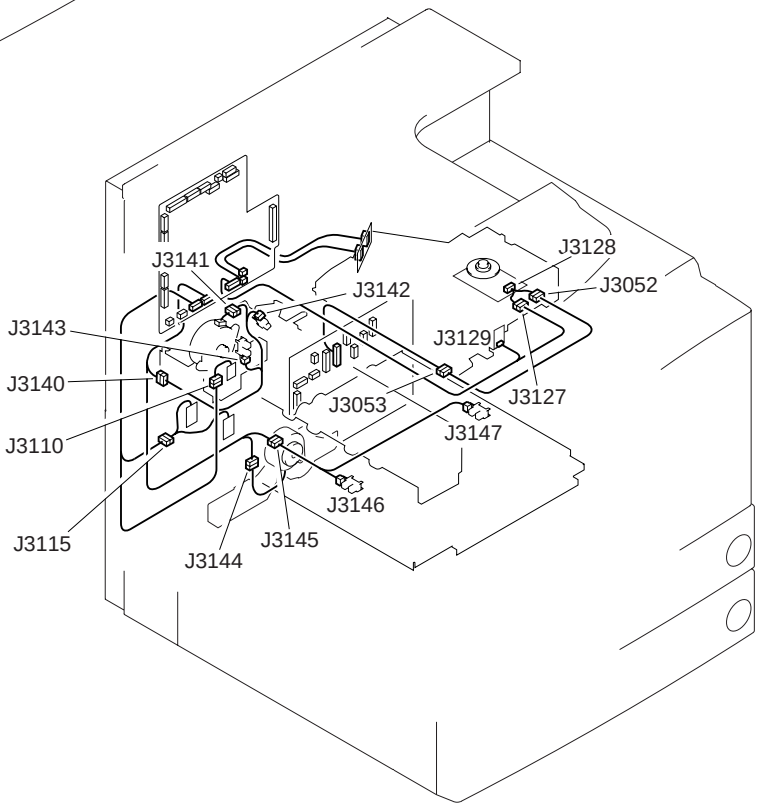

COPYRIGHT ©2002 CANON INC.

FIGURE B1 LIST OF CONNECTORS (2/3)

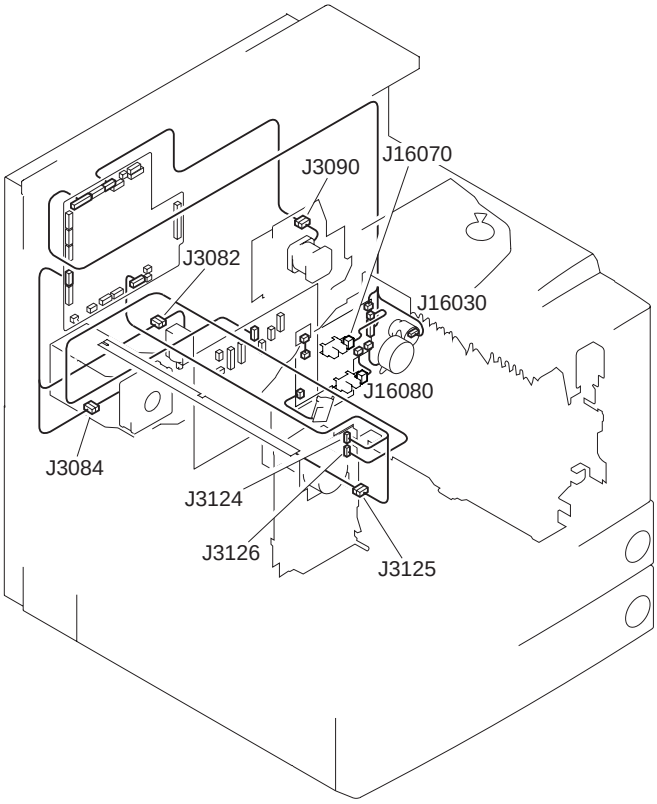

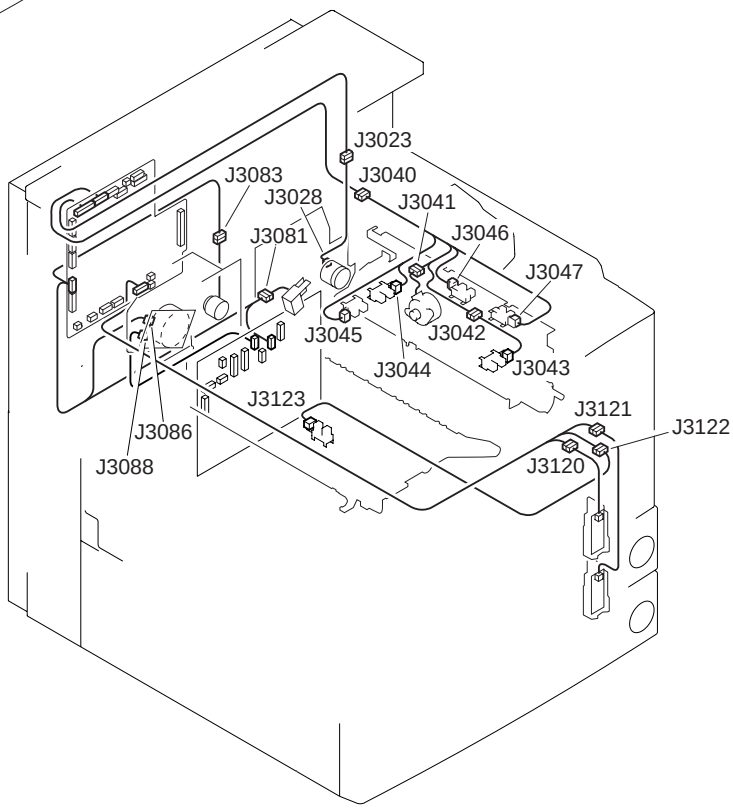

FIGURE B1 LIST OF CONNECTORS (3/3)

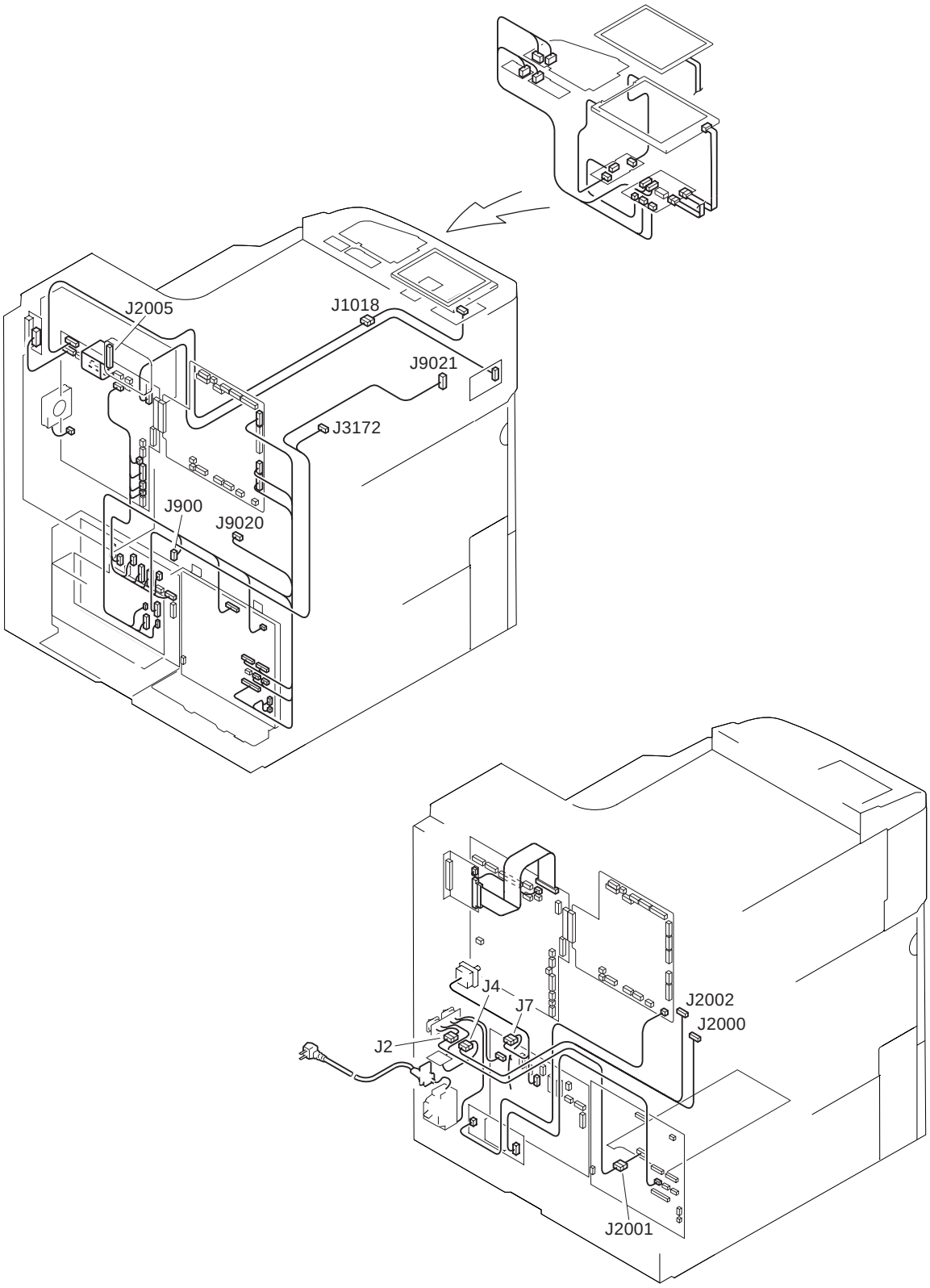

COPYRIGHT ©2002 CANON INC.

FIGURE & KEY NO.	PART NUMBER	RANK	Q'TY	DESCRIPTION	SERIAL NUMBER / REMARKS
B1 -	NPN		RF	LIST OF CONNECTORS	
J1	PCB			CONTROL PANEL INVERTER	
	VS1-0842-002		1	CONNECTOR, 2P, FEMALE	
J2	PCB			CONTROL PANEL INVERTER	
	NPN			LCD CONTROL PANEL	
	PCB			SWITCH	
	VS4-0001-004		1	CONNECTOR, 4P, MALE	
	WS4-0219-000		4	PIN CONTACT, 18-22AWG	
	SYS			READER	
	FH2-6855-000		1	CONNECTOR, 12P, FEMALE	
	FH2-5825-000		5	PIN CONTACT, 16-20AWG	
J3	PCB			CONTROL PANEL INVERTER	
	NPN			LCD CONTROL PANEL	
J4	PCB			ARRESTER	
	VS4-0001-002		1	CONNECTOR, 2P, MALE	
	WS4-0219-000		2	PIN CONTACT, 18-22AWG	
	SYS			NEW CARD READER	ACCESSORY
	VS1-6314-005		1	CONNECTOR, 5P, FEMALE	
J5	PCB			MAIN POWER SUPPLY	
	PCB			ACCESSORY POWER SUPPLY	ACC TYPE/ACCESSORY
J6	PCB			MAIN POWER SUPPLY	
	PCB			SWITCH	
J7	PCB			MAIN POWER SUPPLY	
	VS3-5116-006		1	CONNECTOR, 6P, FEMALE	
	WS3-5174-000		4	SOCKT CONTACT,16-20AWG	
J8	PCB			MAIN POWER SUPPLY	
	WS3-5399-000		1	CONNECTOR, 5P, MALE	
	WS3-5174-000		3	SOCKT CONTACT,16-20AWG	
J11	PCB			MAIN CONTROLLER	
	PCB			COUNTER	

FIGURE & KEY NO.	PART NUMBER	RANK	Q'TY	DESCRIPTION	SERIAL NUMBER / REMARKS
B1 - J20	PCB			SOFT ID	
	VS1-6314-011		1	CONNECTOR, 11P, FEMALE	
J21	VS1-5824-002		1	CONNECTOR, 2P, FEMALE	
	VS1-6321-002		1	CONNECTOR, 2P, FEMALE	
	WS3-5358-000		2	SOCKET CONTACT, 22-26AWG	
	VS1-5057-002		1	CONNECTOR, SNAP TIGHT	
J47	SYS			ASSIST	ACCESSORY
	VS1-6321-008		1	CONNECTOR, 8P, FEMALE	
J100	PCB			HV POWER SUPPLY	
	PCB			MAIN POWER SUPPLY	
J110	PCB			HV POWER SUPPLY	
	VS1-6314-003		1	CONNECTOR, 3P, MALE	
J111	PCB			HV POWER SUPPLY	
	VS1-6314-006		1	CONNECTOR, 6P, FEMALE	
J120	PCB			HV POWER SUPPLY	
	VS3-5083-004		1	CONNECTOR, 4P, FEMALE	
	WS3-5160-000		2	SOCKET CONTACT, 18-24AWG	
J121	PCB			HV POWER SUPPLY	
	VS1-6302-015		1	CONNECTOR, 15P, MALE	
	WS3-5569-000		15	PIN, CONTACT	
J122	PCB			HV POWER SUPPLY	
	VS1-6302-004		1	CONNECTOR, 4P, MALE	
	WS3-5569-000		4	PIN, CONTACT	
J124	PCB			HV POWER SUPPLY	
	VS1-6302-010		1	CONNECTOR, 10P, FEMALE	
	WS3-5569-000		10	PIN, CONTACT	
J126	PCB			HV POWER SUPPLY	
	VS1-6302-009		1	CONNECTOR, 9P, MALE	
	WS3-5569-000		6	PIN, CONTACT	
J127	PCB			HV POWER SUPPLY	

COPYRIGHT ©2002 CANON INC.

FIGURE & KEY NO.	PART NUMBER	RANK	Q'TY	DESCRIPTION	SERIAL NUMBER / REMARKS
B1 - J127	VS1-6302-002		1	CONNECTOR, 2P, MALE	220/240V
	WS3-5569-000		2	PIN, CONTACT	220/240V
J130	PCB			HV POWER SUPPLY	
	VS3-5083-007		1	CONNECTOR, 7P, FEMALE	
	WS3-5160-000		2	SOCKET CONTACT, 18-24AWG	
J131	PCB			HV POWER SUPPLY	
	VS3-5083-005		1	CONNECTOR, 5P, FEMALE	
	WS3-5160-000		1	SOCKET CONTACT, 18-24AWG	
J135	PCB			HV POWER SUPPLY	
	VS3-5083-002		1	CONNECTOR, 2P, FEMALE	
	WS3-5160-000		2	SOCKET CONTACT, 18-24AWG	
J136	PCB			HV POWER SUPPLY	
	VT2-5162-024		1	HOLDER, CONNECTOR, 24P	
	VS1-6320-012		1	CONNECTOR, 12P, MALE	
	VS1-6321-012		1	CONNECTOR, 12P, MALE	
J200	PCB			MAIN POWER SUPPLY	
	VS3-5083-003		1	CONNECTOR, 3P, FEMALE	
	WS3-5160-000		2	SOCKET CONTACT, 18-24AWG	
J201	PCB			MAIN POWER SUPPLY	
	VS1-6314-003		1	CONNECTOR, 3P, MALE	
J202	PCB			MAIN POWER SUPPLY	
	VS3-5083-006		1	CONNECTOR, 6P, FEMALE	
	WS3-5160-000		6	SOCKET CONTACT, 18-24AWG	
J203	PCB			MAIN POWER SUPPLY	
	VS3-5083-007		1	CONNECTOR, 7P, FEMALE	
	WS3-5160-000		6	SOCKET CONTACT, 18-24AWG	
J204	PCB			MAIN POWER SUPPLY	
	VS3-5083-010		1	CONNECTOR, 10P, FEMALE	
	WS3-5160-000		8	SOCKET CONTACT, 18-24AWG	
J205	PCB			MAIN POWER SUPPLY	

FIGURE & KEY NO.	PART NUMBER	RANK	Q'TY	DESCRIPTION	SERIAL NUMBER / REMARKS
B1 - J205	VS1-6321-008		1	CONNECTOR, 8P, FEMALE	
J208	PCB			MAIN POWER SUPPLY	
	VS1-6321-007		1	CONNECTOR, 7P, FEMALE	
J300	PCB			DC CONTROLLER	
	VS3-5083-008		1	CONNECTOR, 8P, FEMALE	
	WS3-5160-000		8	SOCKET CONTACT, 18-24AWG	
J301	PCB			DC CONTROLLER	
	VT2-5161-026		1	HOLDER, CONNECTOR, 26P	
	VS1-6313-013		1	CONNECTOR, 13P, FEMALE	
	VS1-6314-013		1	CONNECTOR, 13P, FEMALE	
J302	PCB			DC CONTROLLER	
	VT2-5161-036		1	HOLDER, CONNECTOR, 36P	
	VS1-6313-018		1	CONNECTOR, 18P, FEMALE	
	VS1-6314-018		1	CONNECTOR, 18P, MALE	
J304	PCB			DC CONTROLLER	
	VT2-5161-024		1	CONNECTOR, 24P, FEMALE	
	VS1-6313-012		1	CONNECTOR, 12P, FEMALE	
	VS1-6314-012		1	CONNECTOR, 12P, FEMALE	
J307	PCB			DC CONTROLLER	
	VS1-6314-004		1	CONNECTOR, 4P, FEMALE	
J308	PCB			DC CONTROLLER	
	VT2-5161-020		1	HOLDER, CONNECTOR, 20P	
	VS1-6313-010		1	CONNECTOR, 10P, FEMALE	
	VS1-6314-010		1	CONNECTOR, 10P, FEMALE	
J309	PCB			DC CONTROLLER	
	VS1-6302-006		1	CONNECTOR, 6P, MALE	
	WS3-5569-000		6	PIN, CONTACT	
J310	PCB			DC CONTROLLER	
	VS1-6314-005		1	CONNECTOR, 5P, FEMALE	
J311	PCB			DC CONTROLLER	

COPYRIGHT ©2002 CANON INC.

FIGURE & KEY NO.	PART NUMBER	RANK	Q'TY	DESCRIPTION	SERIAL NUMBER / REMARKS
B1 - J311	VT2-5161-018		1	HOLDER, CONNECTOR, 18P	
	VS1-6313-009		1	CONNECTOR, 9P, FEMALE	
	VS1-6314-009		1	CONNECTOR, 9P, FEMALE	
J312	PCB			DC CONTROLLER	
	VT2-5161-030		1	HOLDER, CONNECTOR, 30P	
	VS1-6313-015		1	CONNECTOR, 15P, FEMALE	
	VS1-6314-015		1	CONNECTOR, 15P, FEMALE	
J313	PCB			DC CONTROLLER	
	VT2-5161-024		1	CONNECTOR, 24P, FEMALE	
	VS1-6313-012		1	CONNECTOR, 12P, FEMALE	
	VS1-6314-012		1	CONNECTOR, 12P, FEMALE	
J314	PCB			DC CONTROLLER	
	VT2-5161-020		1	HOLDER, CONNECTOR, 20P	
	VS1-6313-010		1	CONNECTOR, 10P, FEMALE	
	VS1-6314-010		1	CONNECTOR, 10P, FEMALE	
J315	PCB			DC CONTROLLER	
	VT2-5161-022		1	HOLDER, CONNECTOR, 22P	
	VS1-6313-011		1	CONNECTOR, 11P, FEMALE	
	VS1-6314-011		1	CONNECTOR, 11P, FEMALE	
J316	PCB			DC CONTROLLER	
	PCB			MAIN CONTROLLER	
J320	PCB			DC CONTROLLER	
	VS1-6302-004		1	CONNECTOR, 4P, MALE	
	WS3-5569-000		4	PIN, CONTACT	
J332	PCB			DC CONTROLLER	
	VS1-6302-002		1	CONNECTOR, 2P, MALE	220/240V
	WS3-5569-000		2	PIN, CONTACT	220/240V
J500	PCB			LASER DRIVER	
	VS1-6313-004		1	CONNECTOR, 4P, FEMALE	
J501	PCB			LASER DRIVER	

FIGURE & KEY NO.	PART NUMBER	RANK	Q'TY	DESCRIPTION	SERIAL NUMBER / REMARKS
B1 - J501	VS1-6313-005		1	CONNECTOR, 5P, FEMALE	
J701	PCB			ACCESSORY POWER SUPPLY	ACC TYPE/ACCESSORY
	VS1-6314-003		1	CONNECTOR, 3P, MALE	
J702	PCB			ACCESSORY POWER SUPPLY	ACC TYPE/ACCESSORY
	VS3-5083-004		1	CONNECTOR, 4P, FEMALE	
	WS3-5160-000		4	SOCKET CONTACT, 18-24AWG	
J707	PCB			ACCESSORY POWER SUPPLY	ACC TYPE/ACCESSORY
	VS1-6321-004		1	CONNECTOR, 4P, FEMALE	
J708	PCB			ACCESSORY POWER SUPPLY	ACC TYPE/ACCESSORY
	VS1-6321-007		1	CONNECTOR, 7P, FEMALE	
J712	PCB			PSEUDO CI	FAX TYPE/ACCESSORY
	VS1-6314-004		1	CONNECTOR, 4P, FEMALE	
J713	PCB			PSEUDO CI	FAX TYPE/ACCESSORY
	VS3-5083-002		1	CONNECTOR, 2P, FEMALE	
	WS3-5160-000		2	SOCKET CONTACT, 18-24AWG	
J716	PCB			THERMISTOR SEP. POWER SUPPLY	220/240V
	VS1-6302-002		1	CONNECTOR, 2P, MALE	220/240V
	WS3-5569-000		2	PIN, CONTACT	220/240V
J717	PCB			THERMISTOR SEP. POWER SUPPLY	220/240V
	VS1-6302-003		1	CONNECTOR, 3P, FEMALE	220/240V
	WS3-5569-000		2	PIN, CONTACT	220/240V
J900	SYS			G3 FAX UNIT	FAX TYPE/ACCESSORY
	VS1-6302-010		1	CONNECTOR, 10P, FEMALE	
	WS3-5569-000		10	PIN, CONTACT	
J1011	PCB			MAIN CONTROLLER	
	PCB			ETHERNET BOARD	PRINTER/LIPS TYPE
J1015	PCB			MAIN CONTROLLER	
	VS1-6407-080		1	CONNECTOR, 80P, FEMALE	
J1017	PCB			MAIN CONTROLLER	
	FF3-4191-000		1	CABLE, FLAT, HD	

COPYRIGHT ©2002 CANON INC.

FIGURE & KEY NO.	PART NUMBER	RANK	Q'TY	DESCRIPTION	SERIAL NUMBER / REMARKS
B1 - J1018	PCB			MAIN CONTROLLER	
	VT2-5161-036		1	HOLDER, CONNECTOR, 36P	
	VS1-6313-018		1	CONNECTOR, 18P, FEMALE	
	VS1-6314-018		1	CONNECTOR, 18P, MALE	
J1019	PCB			MAIN CONTROLLER	
	VT2-5161-026		1	HOLDER, CONNECTOR, 26P	
	VS1-6313-013		1	CONNECTOR, 13P, FEMALE	
	VS1-6314-013		1	CONNECTOR, 13P, FEMALE	
J1020	PCB			MAIN CONTROLLER	
	VS1-6302-015		1	CONNECTOR, 15P, MALE	
	WS3-5569-000		15	PIN, CONTACT	
J1021	PCB			MAIN CONTROLLER	
	VS1-6314-003		1	CONNECTOR, 3P, MALE	
J1022	PCB			MAIN CONTROLLER	
	VS1-6321-006		1	CONNECTOR, 6P, FEMALE	
J1023	PCB			MAIN CONTROLLER	
	VS1-6314-011		1	CONNECTOR, 11P, FEMALE	
J1024	PCB			MAIN CONTROLLER	
	VS1-6314-010		1	CONNECTOR, 10P, FEMALE	
J1027	PCB			MAIN CONTROLLER	
	VS1-6302-002		1	CONNECTOR, 2P, MALE	
	WS3-5569-000		2	PIN, CONTACT	
J1028	PCB			MAIN CONTROLLER	
	NPN			CONTROLLER BOX FAN	FM3
J1050	PCB			CENTRO	
	VT2-5161-026		1	HOLDER, CONNECTOR, 26P	
	VS1-6313-013		1	CONNECTOR, 13P, FEMALE	
	VS1-6314-013		1	CONNECTOR, 13P, FEMALE	
J1058	PCB			MAIN CONTROLLER	
	VS1-6302-004		1	CONNECTOR, 4P, MALE	

FIGURE & KEY NO.	PART NUMBER	RANK	Q'TY	DESCRIPTION	SERIAL NUMBER / REMARKS
B1 - J1058	WS3-5569-000		4	PIN, CONTACT	
J1059	PCB			MAIN CONTROLLER	
	VS1-6314-004		1	CONNECTOR, 4P, FEMALE	
J1060	PCB			MAIN CONTROLLER	
	VS1-0842-004		1	CONNECTOR, 4P, FEMALE	
J1061	PCB			MAIN CONTROLLER	
	VS1-6314-004		1	CONNECTOR, 4P, FEMALE	
J1101	PCB			CONTROL PANEL KEY	
	VS1-6314-011		1	CONNECTOR, 11P, FEMALE	
J1102	PCB			CONTROL PANEL KEY	
	VS1-6314-010		1	CONNECTOR, 10P, FEMALE	
J1103	PCB			CONTROL PANEL KEY	
	VS1-6314-008		1	CONNECTOR, 8P, FEMALE	
J1104	PCB			CONTROL PANEL KEY	
	VS1-6314-006		1	CONNECTOR, 6P, FEMALE	
J1601	PCB			PAPER PICK-UP	
	VS1-6314-018		1	CONNECTOR, 18P, MALE	
J1602	PCB			PAPER PICK-UP	
	NPN			PAPER PICK-UP MOTOR	M2
J1603	PCB			PAPER PICK-UP	
	VS1-6321-004		1	CONNECTOR, 4P, FEMALE	
J1604	PCB			PAPER PICK-UP	
	NPN			PAPER FEED DOWN SOLENOID	SL1
J1607	PCB			PAPER PICK-UP	
	VS1-6321-003		1	CONNECTOR, 3P, FEMALE	
J1608	PCB			PAPER PICK-UP	
	VS1-6321-003		1	CONNECTOR, 3P, FEMALE	
J2000	VS4-0002-002		1	CONNECTOR, 2P, FEMALE	
	WS4-0217-000		2	SOCKET CONTACT, 22-18AWG	
J2001	NPN			CASSETTE HEATER	ACCESSORY 100V H3

COPYRIGHT ©2002 CANON INC.

FIGURE & KEY NO.	PART NUMBER	RANK	Q'TY	DESCRIPTION	SERIAL NUMBER / REMARKS
B1 - J2001	VS4-0002-002		1	CONNECTOR, 2P, FEMALE	
	WS4-0217-000		2	SOCKET CONTACT, 22-18AWG	
J2002	SYS			G3 FAX UNIT	FAX TYPE/ACCESSORY
	VS4-0001-002		1	CONNECTOR, 2P, MALE	
	WS4-0219-000		2	PIN CONTACT, 18-22AWG	
J2003	VS3-5121-003		1	CONNECTOR, 3P, MALE	
	VS3-5122-003		1	CONNECTOR, 3P, MALE	
	WS3-5291-000		3	PIN CONTACT	
	WS3-5292-000		3	SOCKET CONTACT	
J2005	NPN			HDD	HD
	FF3-4191-000		1	CABLE, FLAT, HD	
J2060	SYS			CASSETTE PEDESTAL	ACCESSORY
	PCB			MAIN POWER SUPPLY	
J3020	NPN			DEVELOPING FAN	FM1
	VS1-6321-003		1	CONNECTOR, 3P, FEMALE	
	VS1-5057-003		1	CONNECTOR, SNAP TIGHT	
J3021	VS1-5824-003		1	CONNECTOR, 3P, FEMALE	
	VS1-6321-003		1	CONNECTOR, 3P, FEMALE	
	WS3-5358-000		3	SOCKET CONTACT, 22-26AWG	
	VS1-5057-003		1	CONNECTOR, SNAP TIGHT	
J3022	VS3-0247-004		1	CONNECTOR, 4P, MALE	
	VS3-0248-004		1	CONNECTOR, 4P, FEMALE	
	WS3-5595-000		3	CONTACT	
	WS3-5403-000		3	SOCKET CONTACT	
J3023	VS1-6321-002		2	CONNECTOR, 2P, FEMALE	
	VS1-5057-002		1	CONNECTOR, SNAP TIGHT	
J3024	NPN			MULTI PAPER WIDTH SENSOR	VR1
	VS1-6321-003		1	CONNECTOR, 3P, FEMALE	
	VS1-5057-003		1	CONNECTOR, SNAP TIGHT	
J3025	VS1-0842-004		1	CONNECTOR, 4P, FEMALE	

FIGURE & KEY NO.	PART NUMBER	RANK	Q'TY	DESCRIPTION	SERIAL NUMBER / REMARKS
B1 - J3025	VS1-6321-004		1	CONNECTOR, 4P, FEMALE	
	VS1-5057-004		1	CONNECTOR, SNAP TIGHT	
J3026	NPN			TONER SENSOR	S1
	VS1-0842-003		1	CONNECTOR, 3P, FEMALE	
J3028	NPN			MULTI CLUTCH	CL2
	VS1-6314-003		1	CONNECTOR, 3P, MALE	
J3029	NPN			HUMIDITY SENSOR	S3
	VS1-5452-004		1	CONNECTOR, 4P, FEMALE	
J3040	VT2-5161-024		2	CONNECTOR, 24P, FEMALE	
	VS1-6314-012		2	CONNECTOR, 12P, FEMALE	
	VS1-6313-012		2	CONNECTOR, 12P, FEMALE	
	VS1-6319-024		1	CONNECTOR, SNAP TIGHT	
J3041	NPN			SIDE REGIST MOVE MOTOR	M3
	VS1-6321-006		1	CONNECTOR, 6P, FEMALE	
	VS1-5057-006		1	CONNECTOR, SNAP TIGHT	
J3042	VS1-5824-003		1	CONNECTOR, 3P, FEMALE	
	VS1-6321-003		1	CONNECTOR, 3P, FEMALE	
	WS3-5358-000		3	SOCKET CONTACT, 22-26AWG	
	VS1-5057-003		1	CONNECTOR, SNAP TIGHT	
J3043	NPN			SIDE REGIST PAPER SENSOR	PS11
	VS1-5824-003		1	CONNECTOR, 3P, FEMALE	
	WS3-5358-000		3	SOCKET CONTACT, 22-26AWG	
J3044	NPN			REGIST FRONT PAPER SENSOR	PS10
	VS1-6321-003		1	CONNECTOR, 3P, FEMALE	
J3045	NPN			PRE. REGIST FRONT PAPER SENSOR	PS9
	VS1-6321-003		1	CONNECTOR, 3P, FEMALE	
J3046	NPN			RIGHT DOOR OPEN SENSOR	PS23
	VS1-6320-003		1	CONNECTOR, 3P, MALE	
J3047	NPN			MULTI PAPER SENSOR	PS22
	VS1-6320-003		1	CONNECTOR, 3P, MALE	

COPYRIGHT ©2002 CANON INC.

FIGURE & KEY NO.	PART NUMBER	RANK	Q'TY	DESCRIPTION	SERIAL NUMBER / REMARKS
B1 - J3052	VS1-5824-002		1	CONNECTOR, 2P, FEMALE	
	VS1-6321-002		1	CONNECTOR, 2P, FEMALE	
	WS3-5358-000		2	SOCKET CONTACT, 22-26AWG	
	VS1-5057-002		1	CONNECTOR, SNAP TIGHT	
J3053	VS1-5729-002		1	CONNECTOR, 2P, MALE	
	VS3-5083-002		1	CONNECTOR, 2P, FEMALE	
	WS3-5301-000		2	PIN CONTACT	
	WS3-5160-000		2	SOCKET CONTACT, 18-24AWG	
J3081	NPN			MULTI PLATE RELEASE SOLENOID	SL5
	VS1-6321-002		1	CONNECTOR, 2P, FEMALE	
	VS1-5057-002		1	CONNECTOR, SNAP TIGHT	
J3082	NPN			CORONA ROLLER SOLENOID	SL6
	VS1-6321-002		1	CONNECTOR, 2P, FEMALE	
	VS1-5057-002		1	CONNECTOR, SNAP TIGHT	
J3083	NPN			DEVELOPING CLUTCH	CL3
	VS1-6321-002		1	CONNECTOR, 2P, FEMALE	
	VS1-5057-002		1	CONNECTOR, SNAP TIGHT	
J3084	NPN			FIXING FAN	FM2
	VS1-6321-003		1	CONNECTOR, 3P, FEMALE	
	VS1-5057-003		1	CONNECTOR, SNAP TIGHT	
J3086	NPN			MAIN MOTOR	M1
	VS1-6321-004		1	CONNECTOR, 4P, FEMALE	
J3088	NPN			MAIN MOTOR	M1
	VS3-5083-003		1	CONNECTOR, 3P, FEMALE	
	WS3-5160-000		2	SOCKET CONTACT, 18-24AWG	
J3090	NPN			REGIST MOTOR	M9
	VS1-6302-006		1	CONNECTOR, 6P, MALE	
	WS3-5569-000		6	PIN, CONTACT	
J3110	PCB			DRUM SENSOR	
	VS1-6321-002		1	CONNECTOR, 2P, FEMALE	

FIGURE & KEY NO.	PART NUMBER	RANK	Q'TY	DESCRIPTION	SERIAL NUMBER / REMARKS
B1 - J3111	VS1-6321-006		2	CONNECTOR, 6P, FEMALE	
	VS1-5057-006		1	CONNECTOR, SNAP TIGHT	
J3112	NPN			FIXING/FEEDER SENSOR	PS13
	VS1-6321-003		1	CONNECTOR, 3P, FEMALE	
J3113	NPN			FIXING FILM SENSOR	PS26
	VS1-6321-003		1	CONNECTOR, 3P, FEMALE	
J3115	NPN			WASTE TONER SENSOR	S2
	VS1-6321-004		1	CONNECTOR, 4P, FEMALE	
	VS1-5057-004		1	CONNECTOR, SNAP TIGHT	
J3117	VS1-6321-006		2	CONNECTOR, 6P, FEMALE	
	VS1-5057-006		1	CONNECTOR, SNAP TIGHT	
J3118	NPN			CURL CORRECT FAN 1	FM4
	VS1-6321-003		1	CONNECTOR, 3P, FEMALE	
	VS1-5057-003		1	CONNECTOR, SNAP TIGHT	
J3119	NPN			CURL CORRECT FAN 2	FM5
	VS1-6321-003		1	CONNECTOR, 3P, FEMALE	
	VS1-5057-003		1	CONNECTOR, SNAP TIGHT	
J3120	NPN			UPPER CASSETTE SIZE SENSOR	
	VS1-6321-007		1	CONNECTOR, 7P, FEMALE	
	VS1-5057-007		1	CONNECTOR, SNAP TIGHT	
J3121	NPN			LOWER CASSETTE SIZE SENSOR	
	VS1-6321-006		1	CONNECTOR, 6P, FEMALE	
	VS1-5057-006		1	CONNECTOR, SNAP TIGHT	
J3122	VS1-6321-003		2	CONNECTOR, 3P, FEMALE	
	VS1-5057-003		1	CONNECTOR, SNAP TIGHT	
J3123	NPN			PAPER TOP SENSOR	PS12
	VS1-6321-003		1	CONNECTOR, 3P, FEMALE	
J3124	NPN			FIXING MOTOR	M4
	VS1-6321-005		1	CONNECTOR, 5P, FEMALE	
J3125	NPN			PRECONDITIONING LAMP	LAMP2

COPYRIGHT ©2002 CANON INC.

FIGURE & KEY NO.	PART NUMBER	RANK	Q'TY	DESCRIPTION	SERIAL NUMBER / REMARKS
B1 - J3125	VS1-6321-002		1	CONNECTOR, 2P, FEMALE	
	VS1-5057-002		1	CONNECTOR, SNAP TIGHT	
J3126	NPN			FIXING MOTOR	M4
	VS3-5083-003		1	CONNECTOR, 3P, FEMALE	
	WS3-5160-000		2	SOCKET CONTACT, 18-24AWG	
J3127	VS1-6321-003		2	CONNECTOR, 3P, FEMALE	
	VS1-5057-003		1	CONNECTOR, SNAP TIGHT	
J3128	NPN			POLYGON MOTOR	M10
	VS1-6314-005		1	CONNECTOR, 5P, FEMALE	
J3129	NPN			BEAM DETECT	BD
	VS1-6321-004		1	CONNECTOR, 4P, FEMALE	
J3130	SYS			FIN-J1/INNER 2 WAY TRAY-A1	ACCESSORY
	VS1-6321-012		1	CONNECTOR, 12P, MALE	
	VS1-5057-012		1	CONNECTOR, SNAP TIGHT	
J3140	VS1-6321-010		2	CONNECTOR, 10P, FEMALE	
	VS1-5057-010		1	CONNECTOR, SNAP TIGHT	
J3141	NPN			PAPER DELIVERY MOTOR	M5
	VS1-6321-004		1	CONNECTOR, 4P, FEMALE	
	VS1-5057-004		1	CONNECTOR, SNAP TIGHT	
J3142	NPN			PAPER DELIVERY 1 FULL SENSOR	PS16
	VS1-6321-003		1	CONNECTOR, 3P, FEMALE	
J3143	NPN			PAPER DELIVERY 1 PAPER SENSOR	PS15
	VS1-6320-003		1	CONNECTOR, 3P, MALE	
J3144	NPN			DUPLEXING MOTOR	M6
	VS1-6321-004		1	CONNECTOR, 4P, FEMALE	
	VS1-5057-004		1	CONNECTOR, SNAP TIGHT	
J3145	VS1-6321-006		2	CONNECTOR, 6P, FEMALE	
	VS1-5057-006		1	CONNECTOR, SNAP TIGHT	
J3146	NPN			DUPLEXING INLET PAPER SENSOR	PS17
	VS1-6321-003		1	CONNECTOR, 3P, FEMALE	

FIGURE & KEY NO.	PART NUMBER	RANK	Q'TY	DESCRIPTION	SERIAL NUMBER / REMARKS
B1 - J3147	NPN			DUPLEXING OUTLET PAPER SENSOR	PS18
	VS1-6321-003		1	CONNECTOR, 3P, FEMALE	
J3151	VS1-5057-004		1	CONNECTOR, SNAP TIGHT	
	VS1-6321-004		1	CONNECTOR, 4P, FEMALE	
J3172	SYS			FINISHER-J1	ACCESSORY
	VS1-5729-004		1	CONNECTOR, 4P, MALE	
	WS3-5301-000		4	PIN CONTACT	
J3200	VS1-6302-004		1	CONNECTOR, 4P, MALE	
	VS1-6702-004		1	CONNECTOR, 4P, FEMALE	
	WS3-5720-000		4	SOCKET CONTACT, 22-28AWG	
	WS3-5569-000		4	PIN, CONTACT	
J3201	NPN			MAIN THERMISTOR	TH1
	RH2-5317-000		1	CONNECTOR, 2P, MALE	
	RH2-5281-000		2	PIN CONTACT, 26AWG	
J3202	NPN			SUB THERMISTOR	TH2
	VS1-5824-002		1	CONNECTOR, 2P, FEMALE	
	WS3-5358-000		2	SOCKET CONTACT, 22-26AWG	
	VS1-5057-002		1	CONNECTOR, SNAP TIGHT	
J3900	SYS			FIN-J1/INNER 2 WAY TRAY-A1	
	VS1-6321-013		1	CONNECTOR, 13P, FEMALE	
	VS1-5057-013		1	CONNECTOR, SNAP TIGHT	
J4101	VS1-5729-004		1	CONNECTOR, 4P, MALE	
	VS3-5083-004		1	CONNECTOR, 4P, FEMALE	
	WS3-5301-000		4	PIN CONTACT	
	WS3-5160-000		4	SOCKET CONTACT, 18-24AWG	
J6801	PCB			CONTROL PANEL CPU	
	VT2-5161-036		1	HOLDER, CONNECTOR, 36P	
	VS1-6313-018		1	CONNECTOR, 18P, FEMALE	
	VS1-6314-018		1	CONNECTOR, 18P, MALE	
J6803	PCB			CONTROL PANEL CPU	

COPYRIGHT ©2002 CANON INC.

FIGURE & KEY NO.	PART NUMBER	RANK	Q'TY	DESCRIPTION	SERIAL NUMBER / REMARKS
B1 - J6803	NPN			ANALOG TOUCH PANEL	
J6804	PCB			CONTROL PANEL CPU	
	VS1-0842-003		1	CONNECTOR, 3P, FEMALE	
J6805	PCB			CONTROL PANEL CPU	
	VS1-6314-010		1	CONNECTOR, 10P, FEMALE	
J6806	PCB			CONTROL PANEL CPU	
	VS1-6314-011		1	CONNECTOR, 11P, FEMALE	
J6807	PCB			CONTROL PANEL CPU	
	VS1-6314-006		1	CONNECTOR, 6P, FEMALE	
J6808	PCB			CONTROL PANEL CPU	
	VS1-6314-008		1	CONNECTOR, 8P, FEMALE	
J7040	SYS			HFS	ACCESSORY
	PCB			ACCESSORY POWER SUPPLY	ACC TYPE/ACCESSORY
J7050	SYS			2.5K SIDE PAPER DECK	ACCESSORY
	PCB			ACCESSORY POWER SUPPLY	ACC TYPE/ACCESSORY
J7100	SYS			G4 FAX UNIT	ACCESSORY
	VS1-6534-002		1	CONNECTOR, 2P, MALE	
	WS3-5658-000		2	SOCKET CONTACT	
J9020	SYS			G3 FAX UNIT	FAX TYPE/ACCESSORY
	VS1-6321-002		1	CONNECTOR, 2P, FEMALE	
J9021	VS1-6321-002		1	CONNECTOR, 2P, FEMALE	
	VS1-5057-002		1	CONNECTOR, SNAP TIGHT	
J9201	PCB			DIFFERENTIAL	
	VS1-6407-080		1	CONNECTOR, 80P, FEMALE	
J9202	SYS			READER	
	PCB			DIFFERENTIAL	
J9203	PCB			DIFFERENTIAL	
	VS1-6314-004		1	CONNECTOR, 4P, FEMALE	
J9801	NPN			LCD CONTROL PANEL	
	FH2-6842-000		1	CABLE, FCC	

FIGURE & KEY NO.	PART NUMBER	RANK	Q'TY	DESCRIPTION	SERIAL NUMBER / REMARKS
B1 - J9802	PCB			CONTROL PANEL CPU	
	FH2-6842-000		1	CABLE, FCC	
J16030	NPN			VERTICAL PATH CLUTCH	CL1
	VS1-6314-003		1	CONNECTOR, 3P, MALE	
J16070	NPN			UPPER CASSETTE RETRY SENSOR	PS7
	VS1-6314-003		1	CONNECTOR, 3P, MALE	
J16080	NPN			LOWER CASSETTE RETRY SENSOR	PS8
	VS1-6321-003		1	CONNECTOR, 3P, FEMALE	

COPYRIGHT ©2002 CANON INC.

FIGURE B2 LIST OF MOTORS

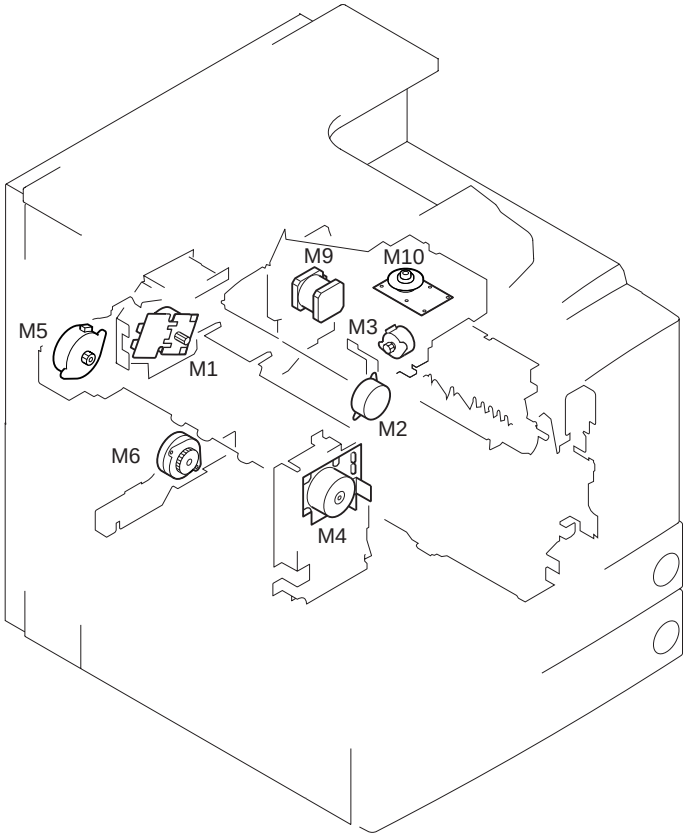

COPYRIGHT ©2002 CANON INC.

FIGURE & KEY NO.	PART NUMBER	RANK	Q'TY	DESCRIPTION	SERIAL NUMBER / REMARKS
B2 -	NPN		RF	LIST OF MOTORS	
M1	FH6-1845-000		1	MOTOR, DC BRUSHLESS	
M2	FH6-1477-000		1	MOTOR, DC24V	
M3	FH6-1253-000		1	MOTOR, STEPPING, DC24V	
M4	FH6-1848-000		1	MOTOR, DC BRUSHLESS	
M5	FH6-1850-000		1	MOTOR, STEPPING	
M6	FH6-1851-000		1	MOTOR, STEPPING	
M9	FH6-1849-000		1	MOTOR, STEPPING	
M10	FG6-5633-000		1	SCANNER ASSEMBLY	

FIGURE B3 LIST OF FAN MOTORS

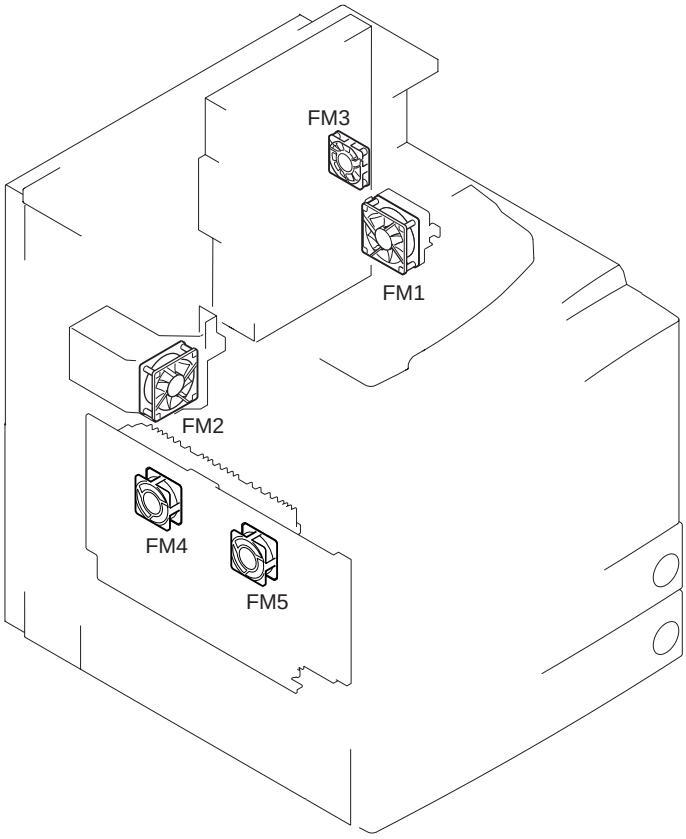

COPYRIGHT ©2002 CANON INC.

FIGURE & KEY NO.	PART NUMBER	RANK	Q'TY	DESCRIPTION	SERIAL NUMBER / REMARKS
B3 -	NPN		RF	LIST OF FAN MOTORS	
FM1	FH6-1852-000		1	FAN	
FM2	FH6-1852-000		1	FAN	
FM3	FH6-1885-000		1	FAN	
FM4	FH6-1854-000		1	FAN	
FM5	FH6-1854-000		1	FAN	

FIGURE B4 LIST OF SENSORS

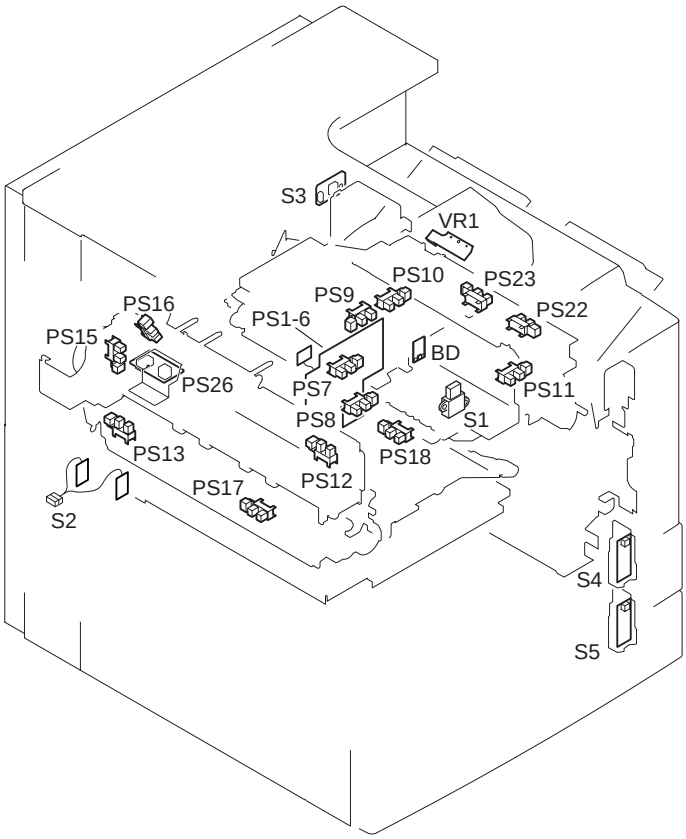

COPYRIGHT ©2002 CANON INC.

FIGURE & KEY NO.	PART NUMBER	RANK	Q'TY	DESCRIPTION	SERIAL NUMBER / REMARKS
B4 -	NPN		RF	LIST OF SENSORS	
BD	FG6-5633-000		1	SCANNER ASSEMBLY	
PS1	FH9-0585-000		1	PHOTO-INTERRUPTER	
PS2	FH9-0585-000		1	PHOTO-INTERRUPTER	
PS3	FH9-0585-000		1	PHOTO-INTERRUPTER	
PS4	FH9-0585-000		1	PHOTO-INTERRUPTER	
PS5	FH9-0585-000		1	PHOTO-INTERRUPTER	
PS6	FH9-0585-000		1	PHOTO-INTERRUPTER	
PS7	FH7-7462-000		1	PHOTO-INTERRUPTER	
PS8	FH7-7462-000		1	PHOTO-INTERRUPTER	
PS9	FH7-7462-000		1	PHOTO-INTERRUPTER	
PS10	FH7-7462-000		1	PHOTO-INTERRUPTER	
PS11	FH7-7462-000		1	PHOTO-INTERRUPTER	
PS12	FH7-7557-000		1	PHOTO-INTERRUPTER	
PS13	FH7-7462-000		1	PHOTO-INTERRUPTER	
PS15	FH7-7557-000		1	PHOTO-INTERRUPTER	
PS16	FH7-7557-000		1	PHOTO-INTERRUPTER	
PS17	FH7-7462-000		1	PHOTO-INTERRUPTER	
PS18	FH7-7462-000		1	PHOTO-INTERRUPTER	
PS22	FH7-7462-000		1	PHOTO-INTERRUPTER	
PS23	FH7-7462-000		1	PHOTO-INTERRUPTER	
PS26	FG6-5710-000		1	FIXING FILM SENSOR PCB ASS'Y	
S1	FH7-7422-000		1	SENSOR, TONER	
S2	FM5-5153-000		1	WASTE TONER SENSOR PCB ASS'Y	
S3	FH7-7559-000		1	HUMIDITY SENSOR UNIT	
S4	FG3-1617-000		1	UPPER CASSETTE SIZE PCB ASS'Y	
S5	FG3-1618-000		1	LOWER CASSETTE SIZE PCB ASS'Y	
VR1	FG5-6289-000		1	MULTI PAPER SIZE PCB ASSEMBLY	

FIGURE B5 LIST OF CLUTCHES, AND OTHERS

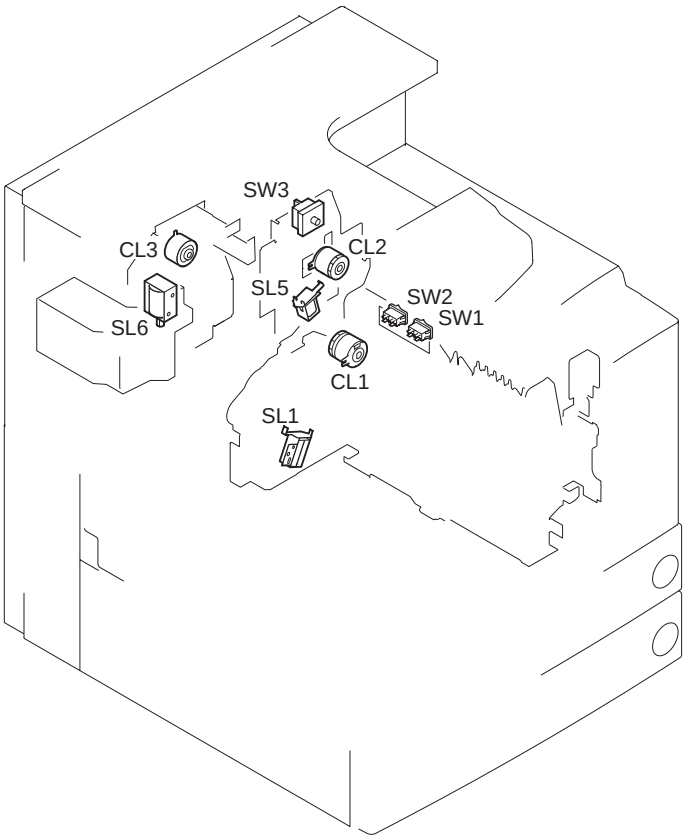

COPYRIGHT ©2002 CANON INC.

FIGURE & KEY NO.	PART NUMBER	RANK	Q'TY	DESCRIPTION	SERIAL NUMBER / REMARKS
B5 -	NPN		RF	LIST OF CLUTCHES, AND OTHERS	
CL1	FH6-5005-000		1	CLUTCH, ELECTRO MAGNETIC	
CL2	FH6-5006-000		1	CLUTCH, ELECTRO MAGNETIC	
CL3	FH6-5007-000		1	CLUTCH, ELECTRO MAGNETIC	
SL1	FH6-5020-000		1	SOLENOID	
SL5	FH6-5051-000		1	SOLENOID	
SL6	FH6-5048-000		1	SOLENOID	
SW1	FG6-5777-000		1	POWER CORD TERMINAL ASSEMBLY	100V
	FG6-5781-000		1	POWER CORD TERMINAL ASSEMBLY	120V
	FG6-5782-000		1	POWER CORD TERMINAL ASSEMBLY	220/240V
SW2	FG6-5777-000		1	POWER CORD TERMINAL ASSEMBLY	100V
	FG6-5781-000		1	POWER CORD TERMINAL ASSEMBLY	120V
	FG6-5782-000		1	POWER CORD TERMINAL ASSEMBLY	220/240V
SW3	WC8-5178-000		1	SWITCH, INTERLOCK	

FIGURE B6 LIST OF HEATERS, LAMPS, ETC.

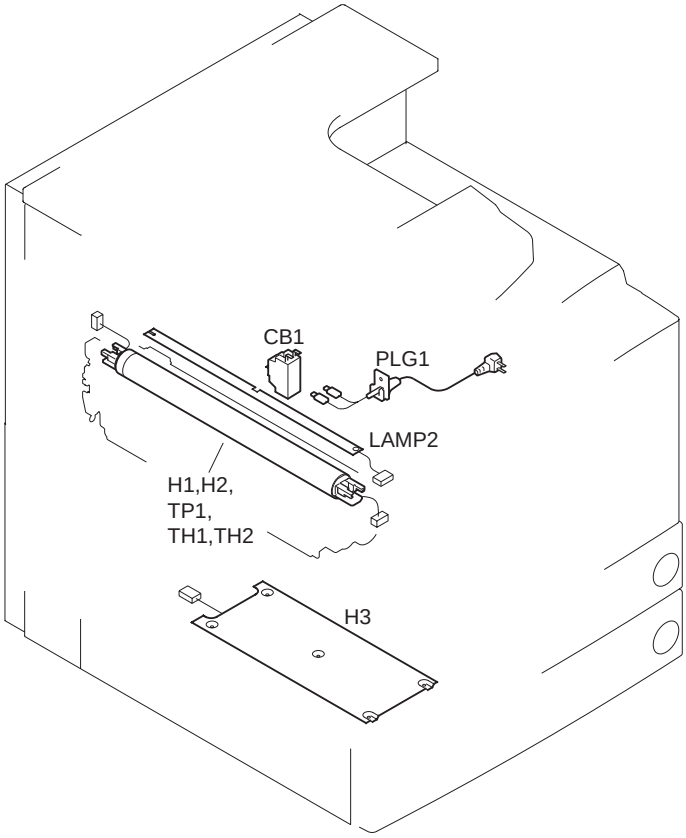

COPYRIGHT ©2002 CANON INC.

FIGURE & KEY NO.	PART NUMBER	RANK	Q'TY	DESCRIPTION	SERIAL NUMBER / REMARKS
B6 -	NPN		RF	LIST OF HEATERS, LAMP ETC.	
CB1	FH7-7528-000		1	BREAKER, CIRCUIT	100/120V
	FH7-7527-000		1	BREAKER, CIRCUIT	220/240V
H1	FG6-5712-000		1	FIXING FILM ASSEMBLY	100V
	FG6-6039-000		1	FIXING FILM ASSEMBLY	120V
	FG6-6041-000		1	FIXING FILM ASSEMBLY	220/240V
H2	FG6-5712-000		1	FIXING FILM ASSEMBLY	100V
	FG6-6039-000		1	FIXING FILM ASSEMBLY	120V
	FG6-6041-000		1	FIXING FILM ASSEMBLY	220/240V
H3	FH7-4576-000		1	HEATER, CASSETTE	ACCESSORY 100V
LAMP2	FG5-6297-000		1	PRECONDITIONING LAMP PCB UNIT	
PLG1	FF3-4192-000		1	CORD, POWER	100V
	FF3-4193-000		1	CORD, POWER	120V
	FH2-5761-020		1	POWER CORD	220V
	FH2-6941-00G		1	POWER CORD	240V UK
	FH2-5763-000		1	POWER CORD	240V CA
TH1	FG6-5712-000		1	FIXING FILM ASSEMBLY	100V
	FG6-6039-000		1	FIXING FILM ASSEMBLY	120V
	FG6-6041-000		1	FIXING FILM ASSEMBLY	220/240V
TH2	FG6-5712-000		1	FIXING FILM ASSEMBLY	100V
	FG6-6039-000		1	FIXING FILM ASSEMBLY	120V
	FG6-6041-000		1	FIXING FILM ASSEMBLY	220/240V
TP1	FG6-5712-000		1	FIXING FILM ASSEMBLY	100V
	FG6-6039-000		1	FIXING FILM ASSEMBLY	120V
	FG6-6041-000		1	FIXING FILM ASSEMBLY	220/240V

FIGURE B7 LIST OF PCBS

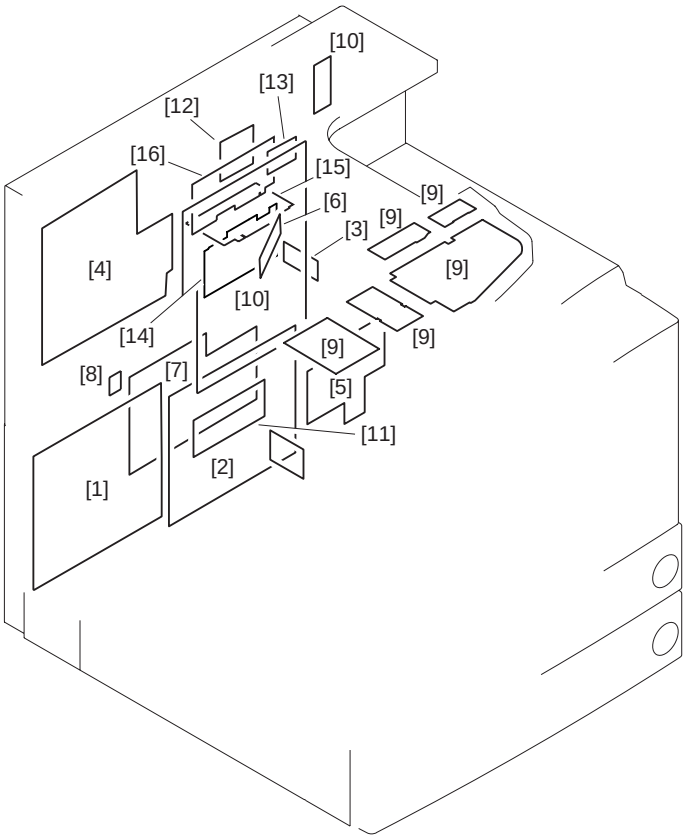

COPYRIGHT ©2002 CANON INC.

FIGURE & KEY NO.	PART NUMBER	RANK	Q'TY	DESCRIPTION	SERIAL NUMBER / REMARKS
B7 -	NPN		RF	LIST OF PCBS	
1	FG3-1603-000		1	HV POWER SUPPLY PCB ASSEMBLY	100/120V
	FG3-1604-000		1	HV POWER SUPPLY PCB ASSEMBLY	220/240V
2	FH3-2613-000		1	SWITCHING REGULATOR PCB ASS'Y	100/120V
	FH3-2614-000		1	SWITCHING REGULATOR PCB ASS'Y	220/240V
3	FG6-5777-000		1	POWER CORD TERMINAL ASSEMBLY	100V
	FG6-5781-000		1	POWER CORD TERMINAL ASSEMBLY	120V
	FG6-5782-000		1	POWER CORD TERMINAL ASSEMBLY	220/240V
4	FG3-1612-000		1	DC CONTROLLER PCB ASSEMBLY	100V
	FG3-1613-000		1	DC CONTROLLER PCB ASSEMBLY	220/240V
5	FG6-0455-000		1	PAPER PICK-UP PCB ASSEMBLY	
6	FG6-5633-000		1	SCANNER ASSEMBLY	
7	FH3-2615-000		1	SWITCHING REGULATOR PCB ASS'Y	ACC TYPE 100/120V
	FH3-2616-000		1	SWITCHING REGULATOR PCB ASS'Y	ACC TYPE 220/240V
8	FG3-0133-000		1	DRUM SENSOR UNIT	
9	FG3-1795-000		1	CONTROL PANEL CPU PCB ASSEMBLY	
	FG6-7021-000		1	CONTROL PANEL PCB ASSEMBLY	
	FG6-7738-000		1	C. PANEL INVERTER PCB ASSEMBLY	
10	FG3-2231-000		1	MAIN CONTROLLER PCB ASSEMBLY	
	FG3-1744-000		1	CENTRO PCB ASSEMBLY	
11	FG3-1608-000		1	THERMISTOR PCB ASSEMBLY	220/240V
12	FG6-5831-000		1	DIFFERENTIAL PCB ASSEMBLY	
13	FG6-5964-000		1	ETHERNET BOARD PCB ASSEMBLY	
14	FG6-6069-000		1	RESOLUTION CONV. PCB ASSEMBLY	
15	FG6-5795-000		1	RISER BOARD PCB ASSEMBLY	
16	FG3-2959-000		1	LIPS BOARD PCB ASSEMBLY	100V

Cassette Feeding Unit - W1

〔F25 - 5401　XDM00001 - 〕

CONTENTS

ZA. ASSEMBLY LOCATION DIAGRAM

Z10. EXTERNAL COVERS, PANELS, ETC.
Z11. INTERNAL COMPONENTS
Z12. RIGHT DOOR ASSEMBLY

Z20. MAIN DRIVE ASSEMBLY

Z32. CASSETTE HEATER ASSEMBLY (ACCESSORY)
Z35. VERTICAL PATH ASSEMBLY

Z40. PAPER PICK-UP ASSEMBLY

Z90. DC CONTROLLER PCB ASSEMBLY
Z91. PEDESTAL PICK-UP PCB ASSEMBLY

ZB1. LIST OF CONNECTORS
ZB2. LIST OF ELECTRIC PARTS

D3. NUMERICAL INDEX

COPYRIGHT © 2002 CANON INC.

FIGURE ZA ASSEMBLY LOCATION DIAGRAM

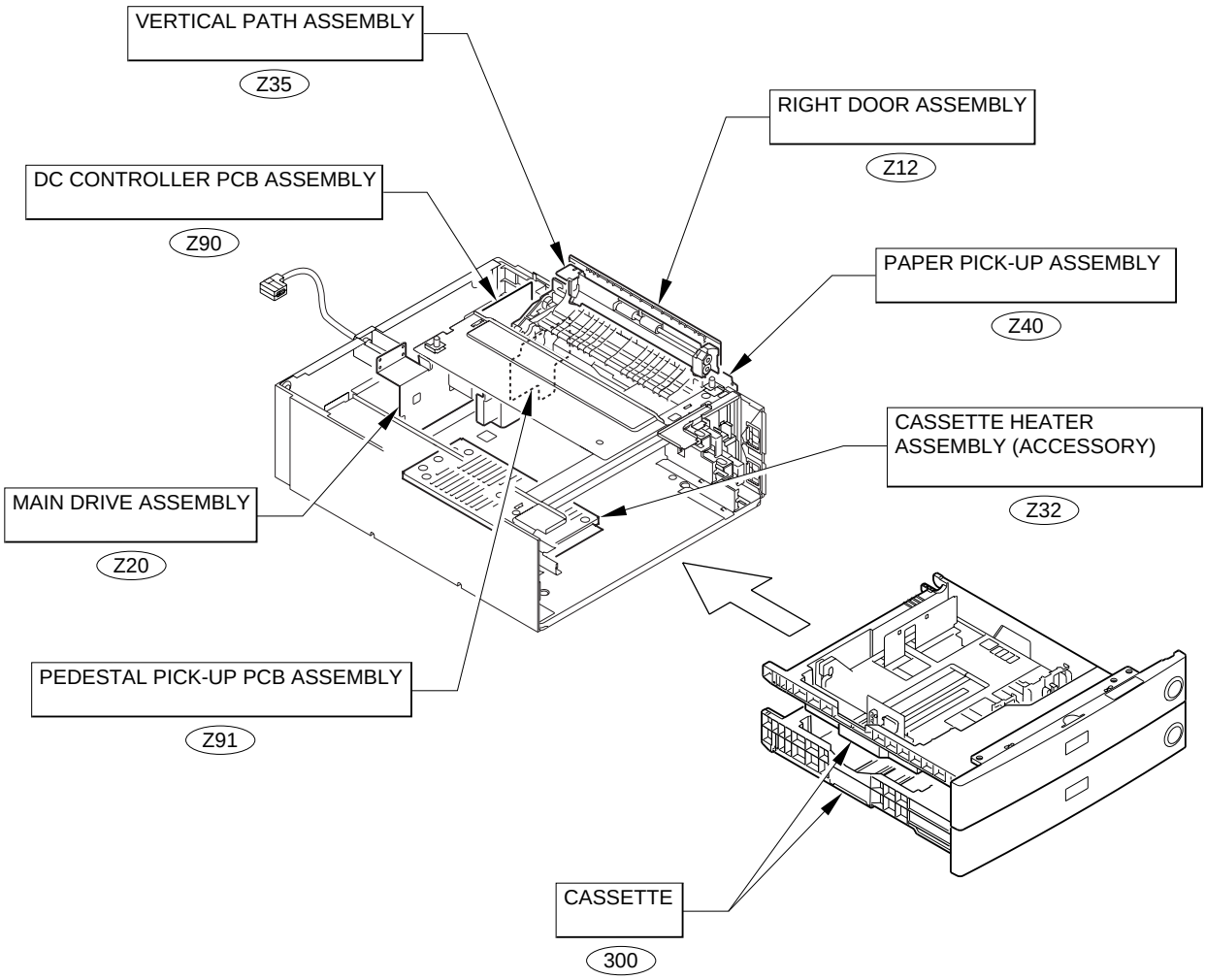

FIGURE Z10 EXTERNAL COVERS, PANELS, ETC.

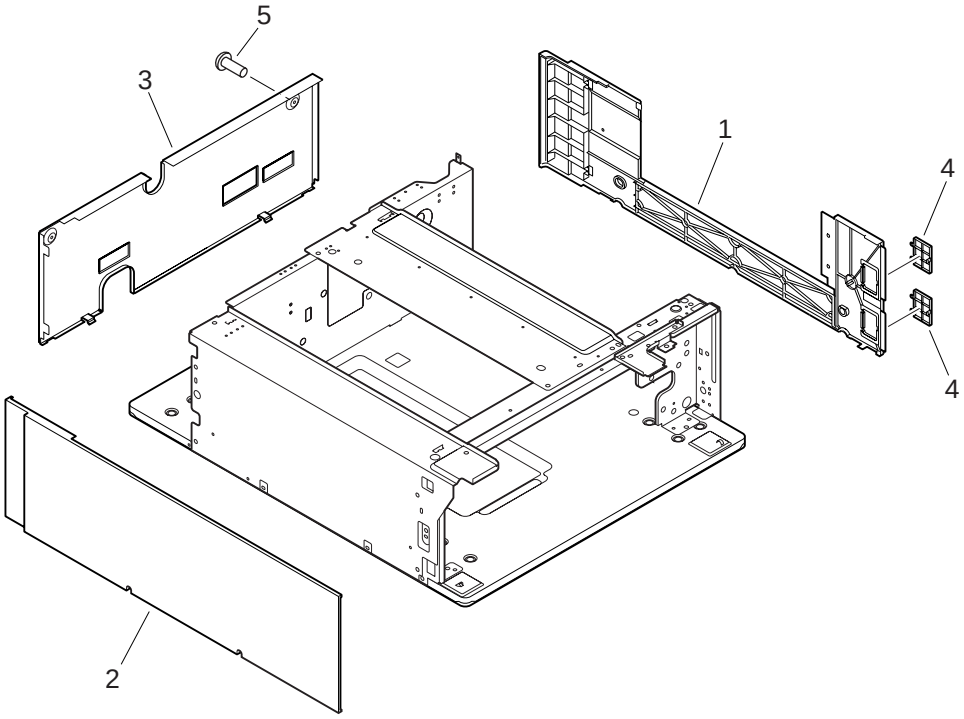

FIGURE & KEY NO.	PART NUMBER	RANK	Q'TY	DESCRIPTION	SERIAL NUMBER / REMARKS
Z10 -	NPN		RF	EXTERNAL COVERS, PANELS, ETC.	
1	FB5-5385-000		1	PANEL, RIGHT	
2	FB5-5386-000		1	PANEL, LEFT	
3	FB5-5387-000		1	PANEL, REAR	
4	FB5-5399-000		2	COVER, RIGHT, SMALL	
5	XA9-0633-000		2	SCREW,W/WASHER,M4X8	

COPYRIGHT © 2002 CANON INC.

FIGURE Z11 INTERNAL COMPONENTS (1/2)

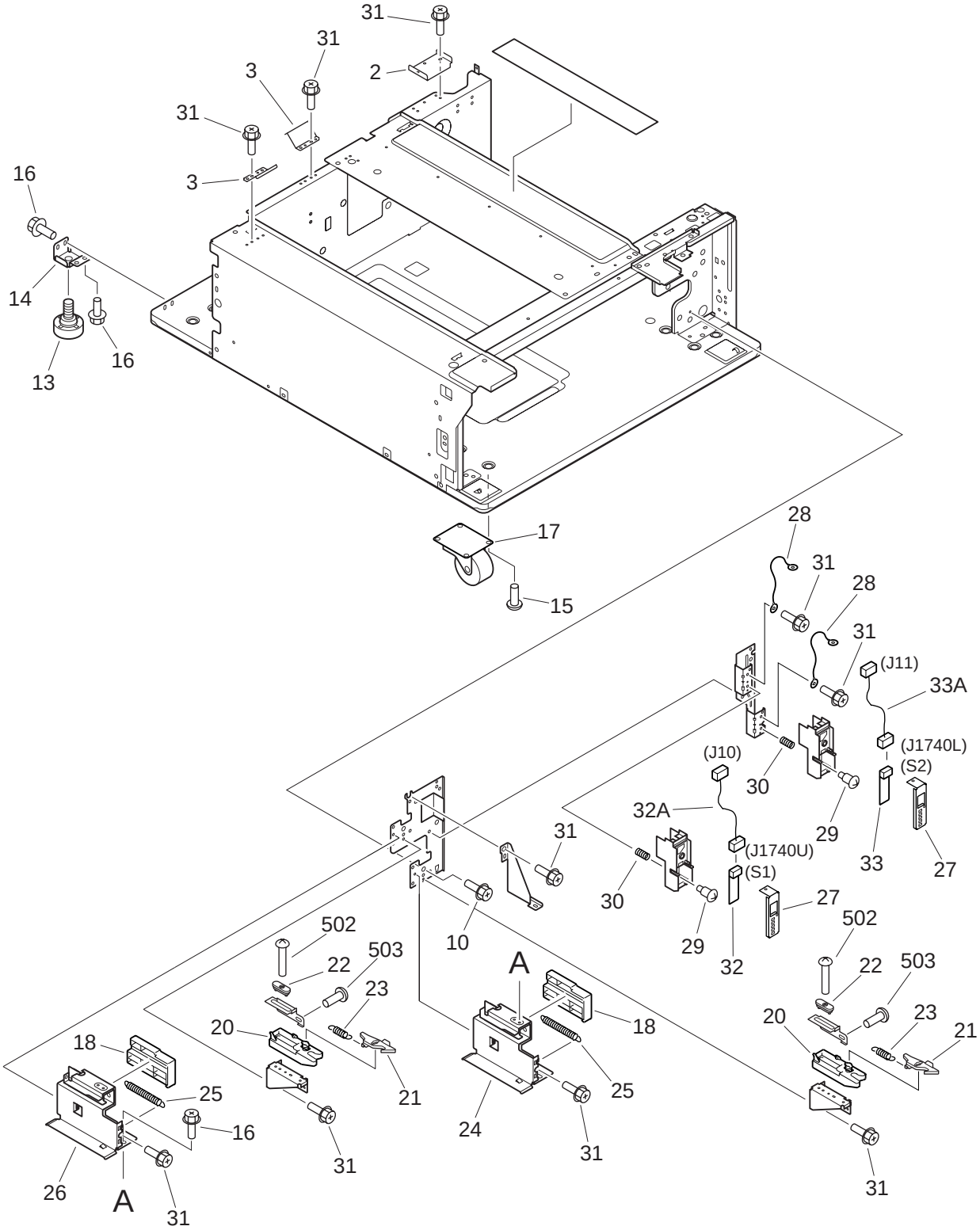

COPYRIGHT © 2002 CANON INC.

FIGURE Z11 INTERNAL COMPONENTS (2/2)

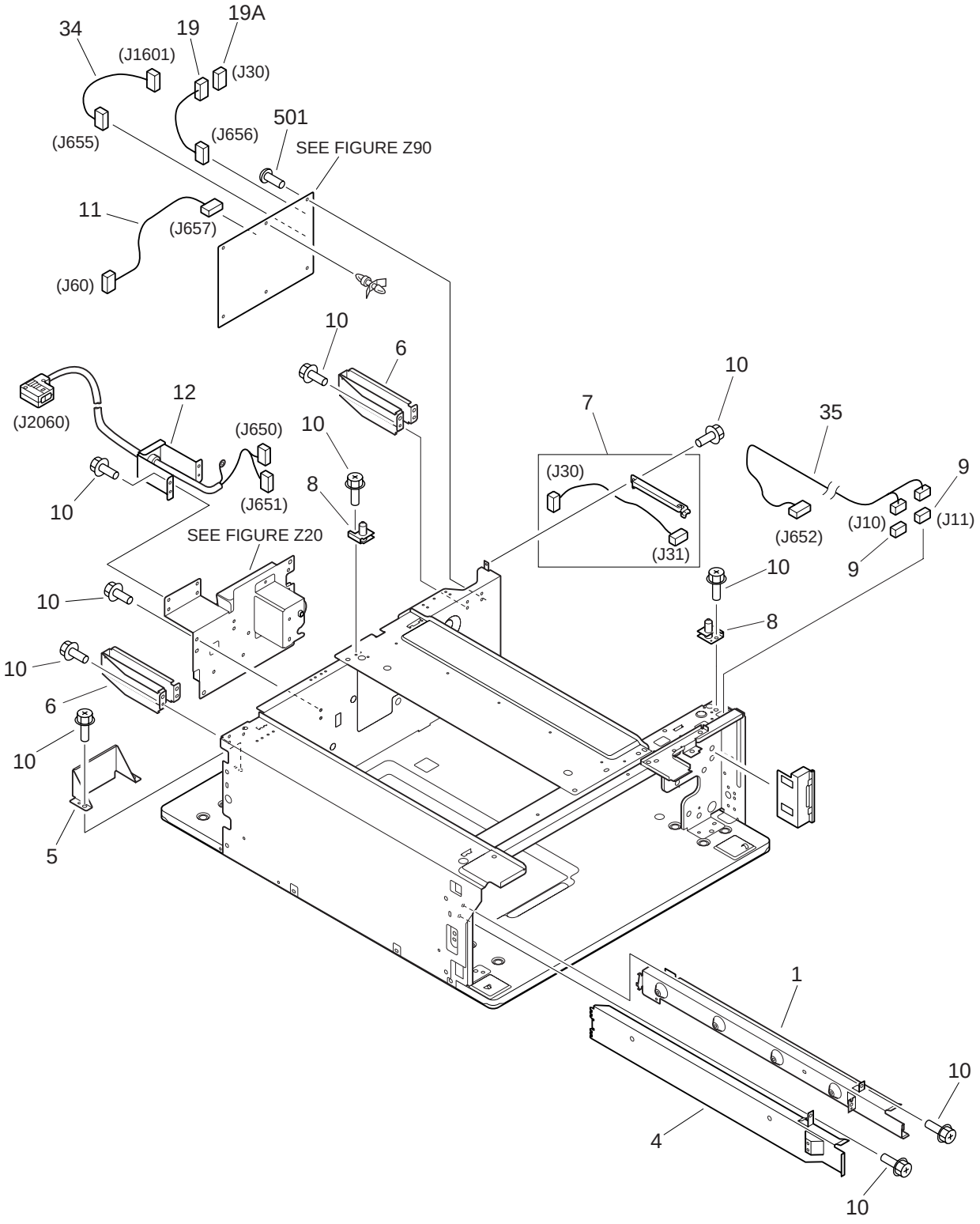

FIGURE & KEY NO.	PART NUMBER	RANK	Q'TY	DESCRIPTION	SERIAL NUMBER / REMARKS
Z11 -	NPN		RF	INTERNAL COMPONENTS	
1	FB3-2210-000		1	RAIL, LEFT, UPPER	
2	FB3-4144-000		1	COVER, FOOT, RIGHT, REAR	
3	FB3-7216-000		2	PLATE, GROUNDING	
4	FB5-5162-000		1	RAIL, LEFT, LOWER	
5	FB5-5397-000		1	COVER, REAR PANEL	
6	FB5-5398-000		2	SUPPORT, REAR PANEL	
7	FF3-1318-000		1	CABLE, RIGHT DOOR	J30,31
8	FF5-4901-000		2	PIN, POSITIONING	
9	VS1-5057-006		2	CONNECTOR, SNAP TIGHT	J10,11
10	XA9-0732-000		AR	SCREW,RS,M4X8	
11	FG3-1733-000		1	CABLE, MOTOR	J60,657
12	FG3-1730-000		1	INTERFACE CABLE	J650,651,2060
13	FB5-3540-000		4	ADJUSTER	
14	FB5-5400-000		4	MOUNT, ADJUSTING	
15	FE9-0290-000		16	SCREW, W/WASHER	
16	XA9-0629-000		9	SCREW,RS,M4X8	
17	XZ9-0508-000		4	CASTER	
18	FB5-3928-000		2	COVER, RIGHT RAIL	
19	FG3-1734-000		1	CABLE, R. DOOR SENSOR CONNECT	J30,656
19A	VS1-5057-003		1	CONNECTOR, SNAP TIGHT	J30
20	FB3-2937-000		2	BLOCK, CASSETTE STOP	
21	FB5-1471-000		2	LEVER, CLICK	
22	FB5-4762-000		2	GUIDE, CASSETTE CLICK	
23	FS7-2287-000		2	SPRING, TENSION	
24	FF6-0087-000		1	RAIL, RIGHT, LOWER	
25	FS7-2288-000		2	SPRING, TENSION	
26	FF6-0096-000		1	RAIL, RIGHT, UPPER	
27	FB3-2948-000		2	COVER, PCB	
28	FF3-1171-000		2	CABLE, GROUNDING	

COPYRIGHT ©2002 CANON INC.

FIGURE & KEY NO.	PART NUMBER	RANK	Q'TY	DESCRIPTION	SERIAL NUMBER / REMARKS
Z11 - 29	FS5-9397-000		2	SCREW,STEPPED,M4	
30	FS6-2311-000		2	SPRING, COMPRESSION	
31	XA9-0626-000		AR	SCREW,RS,M3X6	
32	FG3-1761-000		1	SIZE SENSOR PCB ASSEMBLY	S1 J1740U
32A	FF3-4287-000		1	CABLE, SIZE SENSOR	J10,1740U
33	FG3-1896-000		1	CASSETTE SIZE SENSOR PCB ASS'Y	S2 J1740L
33A	FF3-4341-000		1	CABLE, SIZE SENSOR PCB	J11,1740L
34	FG3-1731-000		1	CABLE, PAPER PICK-UP	J655,1601
35	FG3-1732-000		1	CABLE, CASSETTE SIZE CONNECT	J10,11,652
501	XB1-2300-607		5	SCREW,MACH.,TRUSS HEAD,M3X6	
502	XB1-2301-009		2	SCREW,MACH.,TRUSS HEAD,M3X10	
503	XB6-7400-609		2	SCREW,TP,M4X6	

FIGURE Z12 RIGHT DOOR ASSEMBLY

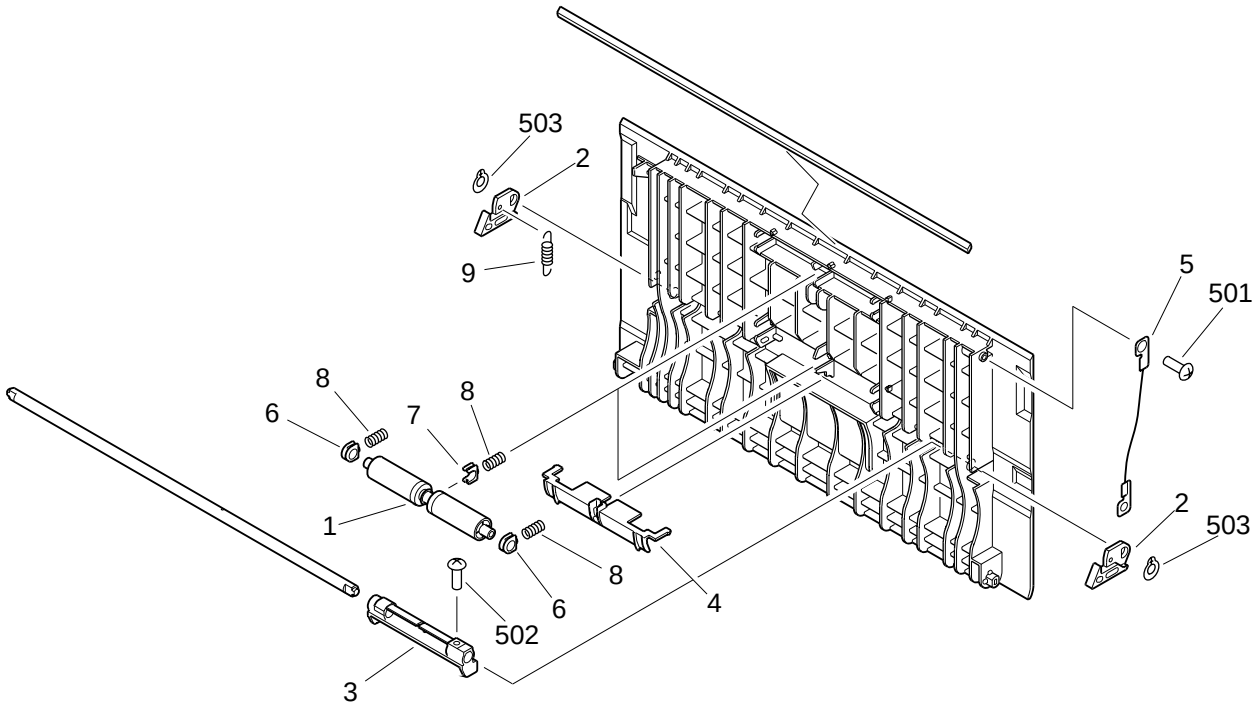

FIGURE & KEY NO.	PART NUMBER	RANK	Q'TY	DESCRIPTION	SERIAL NUMBER / REMARKS
Z12 -	FG6-5987-000		1	RIGHT DOOR ASSEMBLY	
1	FB3-2811-000		2	ROLLER, BELT IDLER	
2	FB3-2837-000		2	HOOK, RIGHT DOOR	
3	FB3-4151-000		1	KNOB	
4	FB3-4154-000		1	COVER, KNOB	
5	FB5-2340-000		1	WIRE, DOOR STOP	
6	FS5-1595-000		4	BLOCK, ROLLER	
7	FS5-1598-000		2	BLOCK, ROLLER	
8	FS6-2308-000		6	SPRING, COMPRESSION	
9	FS7-2363-000		1	SPRING, TENSION	
501	XB4-7400-809		1	SCREW,TAPPING,TRUSS HEAD,M4X8	
502	XB6-7400-809		1	SCREW,TP,M4X8	
503	XD2-2100-502		2	RING,GRIP	

COPYRIGHT © 2002 CANON INC.

FIGURE Z20 MAIN DRIVE ASSEMBLY

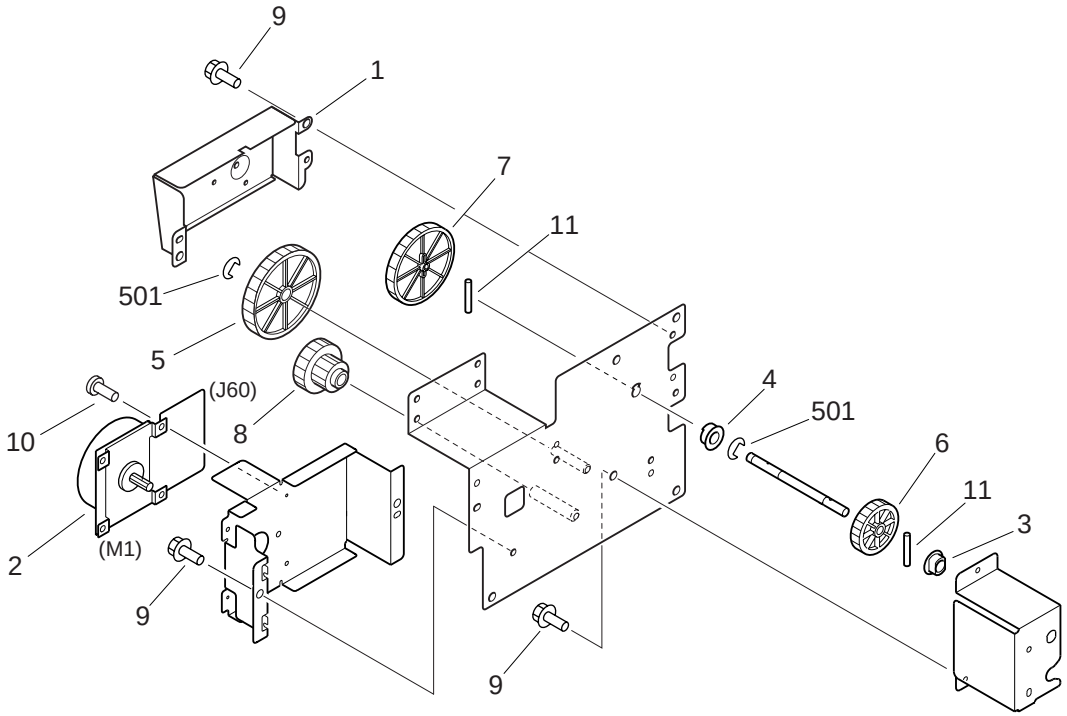

FIGURE & KEY NO.	PART NUMBER	RANK	Q'TY	DESCRIPTION	SERIAL NUMBER / REMARKS
Z20 -	FG6-5988-000		1	MAIN DRIVE ASSEMBLY	
1	FB5-5396-000		1	COVER, GEAR	
2	FH6-1523-000		1	MOTOR, DC24V	M1 J60
3	FS1-1401-000		1	BUSHING	
4	FS5-1685-000		1	BUSHING	
5	FS6-0633-000		1	GEAR, 60T	
6	FS6-0635-000		1	GEAR, 44T	
7	FS7-0791-000		1	GEAR, 52T	
8	FS7-0792-000		1	GEAR, 19T/65T	
9	XA9-0629-000		6	SCREW,RS,M4X8	
10	XA9-0624-000		4	SCREW,M3X4	
11	XD9-0121-000		2	PIN,DOWEL	
501	XD2-1200-502		3	RING,E	

FIGURE Z32 CASSETTE HEATER ASSEMBLY (ACCESSORY)

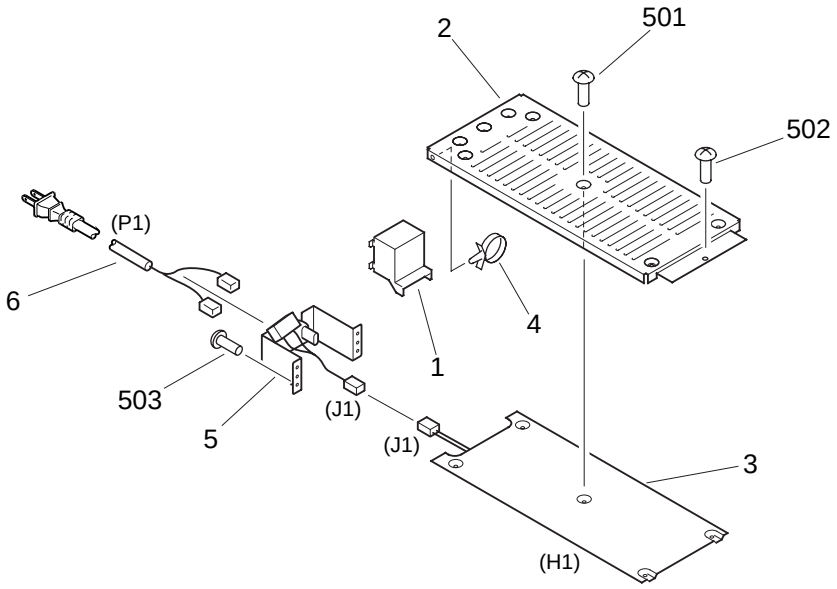

FIGURE & KEY NO.	PART NUMBER	RANK	Q'TY	DESCRIPTION	SERIAL NUMBER / REMARKS
Z32 -	NPN		RF	CASSETTE HEATER ASSEMBLY	ACCESSORY 100V
1	FB3-3192-030		1	COVER, HEATER CONNECTOR	
2	FB3-7192-000		1	COVER, CASSETTE HEATER	
3	FH7-4576-000		1	HEATER, CASSETTE	H1 J1
4	WT2-5041-000		1	TIE, CABLE	
5	FG6-5995-000		1	POWER SUPPLY CABLE MOUNT UNIT	J1
6	FH2-6706-000		1	CORD, POWER	P1
501	XB1-2400-409		5	SCREW,MACH.,TRUSS HEAD,M4X4	
502	XB1-2400-606		1	SCREW,MACH.,TRUSS HEAD,M4X6	
503	XB1-2300-609		2	SCREW,MACH.,TRUSS HEAD,M3X6	

COPYRIGHT © 2002 CANON INC.

FIGURE Z35 VERTICAL PATH ASSEMBLY

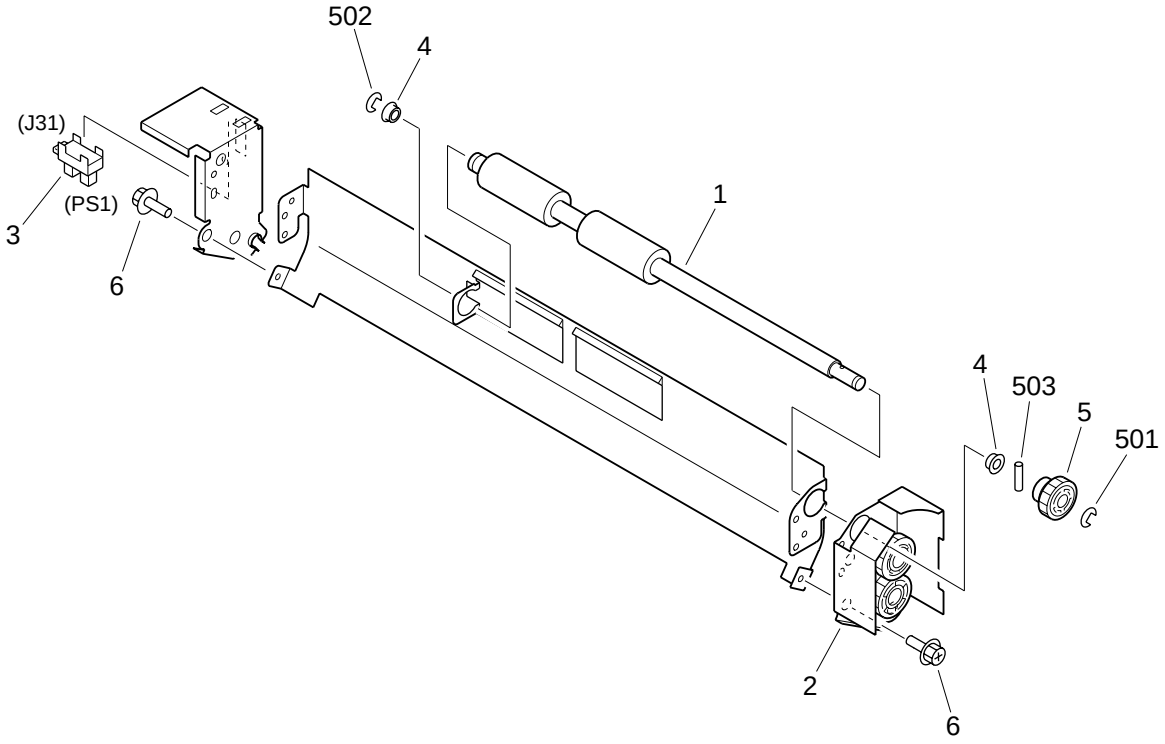

FIGURE & KEY NO.	PART NUMBER	RANK	Q'TY	DESCRIPTION	SERIAL NUMBER / REMARKS
Z35 -	FG6-5993-000		1	VERTICAL PATH ASSEMBLY	
1	FB5-5403-000		1	ROLLER, VERTICAL PATH	
2	FF5-4908-000		1	BOX, GEAR	
3	FH7-7394-000		1	PHOTO-INTERRUPTER	PS1 J31
4	FS5-1594-020		2	BUSHING	
5	FS6-0629-000		1	GEAR, 16T	
6	XA9-0626-000		4	SCREW,RS,M3X6	
501	XD2-1100-502		1	RING,E	
502	XD2-1100-642		1	RING,E	
503	XD3-2200-082		1	PIN,DOWEL	

FIGURE Z40 PAPER PICK-UP ASSEMBLY (1/2)

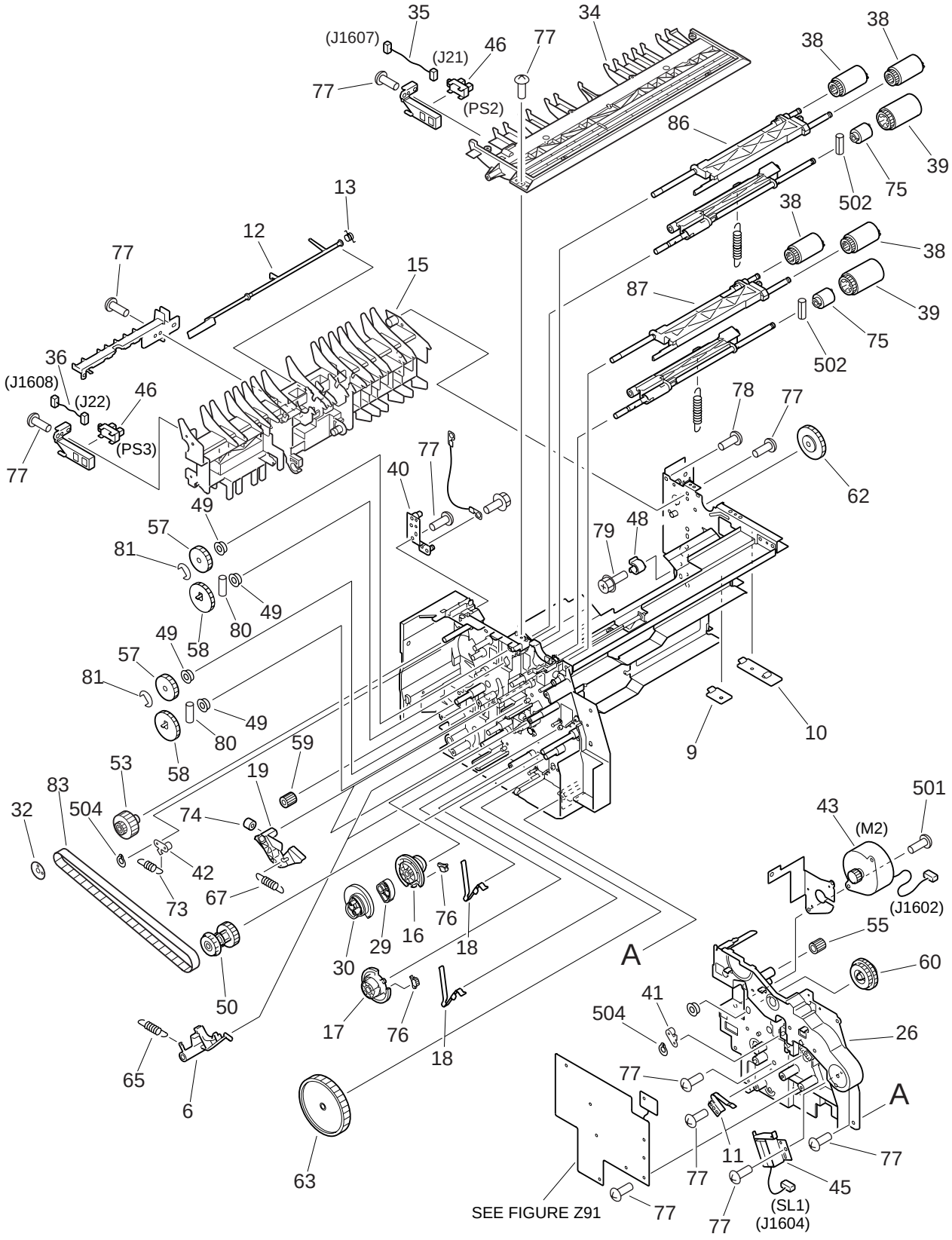

NOTE : This assembly includes the assembly shown in Figure Z91 .

COPYRIGHT © 2002 CANON INC.

FIGURE Z40 PAPER PICK-UP ASSEMBLY (2/2)

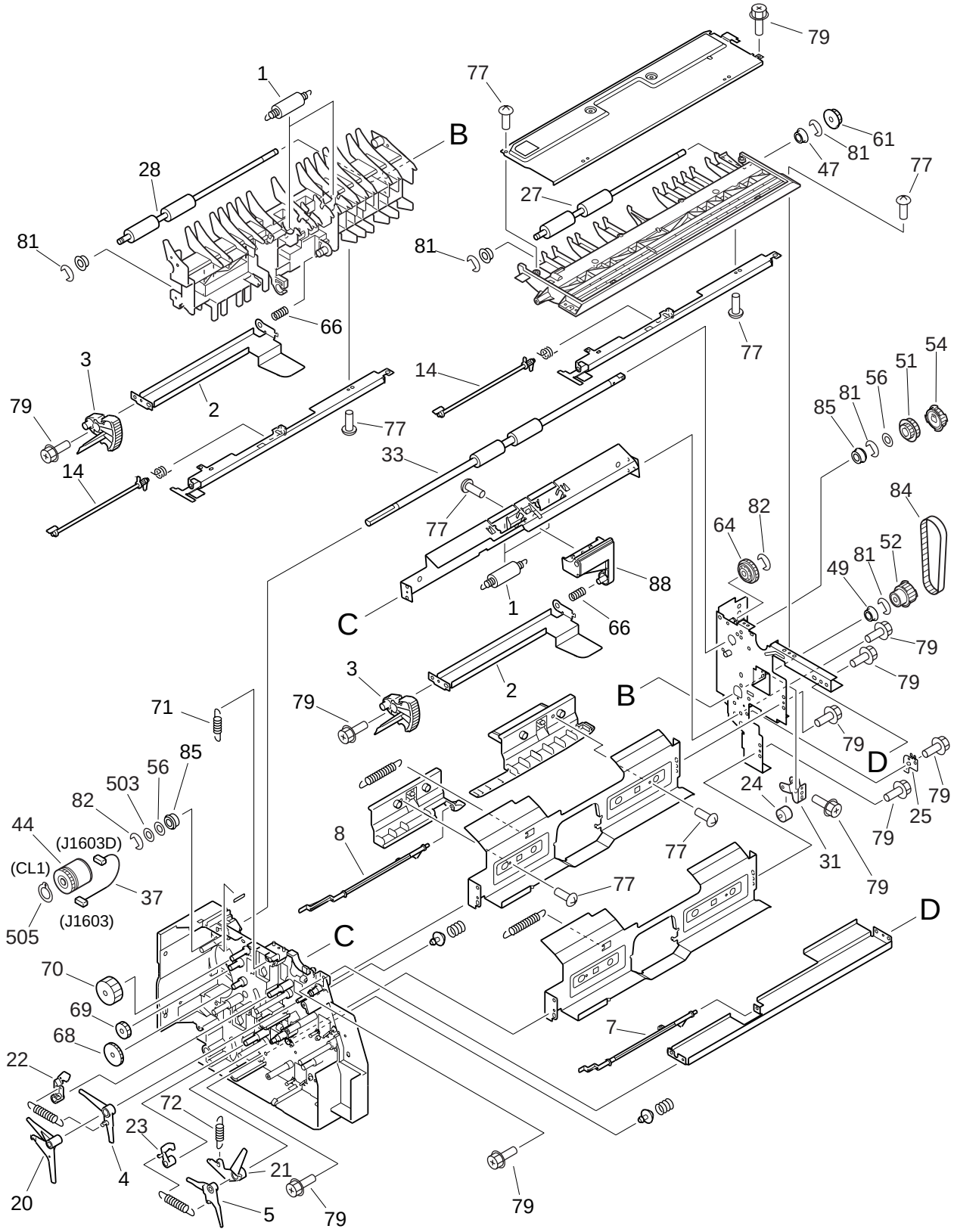

FIGURE & KEY NO.	PART NUMBER	RANK	Q'TY	DESCRIPTION	SERIAL NUMBER / REMARKS
Z40 -	FG6-5989-000		1	PAPER PICK-UP ASSEMBLY	SEE NOTE
1	FB5-5415-000		4	ROLLER, PAPER FEED	
2	FB3-2855-020		2	PLATE, LIFTER	
3	FB3-2856-020		2	GEAR, RATCHET	
4	FB3-2863-000		1	LEVER, LIFTER, UPPER	
5	FB3-2864-000		1	LEVER, LIFTER, LOWER	
6	FB3-2868-020		2	CLAW, LIFTER LOCK	
7	FB3-2880-000		1	FLAG, PAPER SENSOR, UPPER	
8	FB3-2881-000		1	FLAG, PAPER SENSOR, LOWER	
9	FB3-2894-020		1	GUIDE, LOWER CASSETTE	
10	FB3-2897-020		1	GUIDE, UPPER CASSETTE	
11	FB3-2898-020		1	SPRING, LEAF	
12	FB3-4149-000		1	FLAG, VERTICAL SENSOR	
13	FB3-4155-000		1	SPRING, TORSION	
14	FB4-3343-000		2	FLAG, RETRY SENSOR	
15	FB4-3801-000		1	GUIDE, MIDDLE	
16	FB4-5347-000		1	CAM, LIFT UP, UPPER	
17	FB5-9802-000		1	CAM, LIFT UP, LOWER	
18	FB4-5349-000		2	SPRING, LEAF	
19	FB4-5350-000		2	CLAW, LIFTER ARM	
20	FB5-9794-000		1	ARM, LIFTER, UPPER	
21	FB4-5365-000		1	ARM, LIFTER, LOWER	
22	FB5-9795-000		1	LEVER, LOCK, UPPER	
23	FB4-5367-000		1	LEVER, PICK LOCK, LOWER	
24	FB5-4726-000		1	ROLLER, BELT ADJUSTING	
25	FB5-4727-000		1	SPRING, LEAF, GROUNDING	
26	FB5-4728-000		1	COVER, PAPER PICK-UP FRAME	
27	FB5-5412-000		1	ROLLER, PAPER FEED, UPPER	
28	FB5-5413-000		1	ROLLER, PAPER FEED, LOWER	
29	FB5-5286-000		1	CAM, PICK-UP ROLLER, UPPER	

COPYRIGHT © 2002 CANON INC.

FIGURE & KEY NO.	PART NUMBER	RANK	Q'TY	DESCRIPTION	SERIAL NUMBER / REMARKS
Z40 - 30	FB5-5287-000		1	CAM, PICK-UP ROLLER, LOWER	
31	FB5-5289-000		1	HOLDER, ROLLER	
32	FB5-5402-000		1	FLANGE, BELT	
33	FB5-5404-000		1	ROLLER, VERTICAL PATH	
34	FB5-5405-000		1	GUIDE, UPPER	
35	FF3-2974-000		1	CABLE, UPPER RETRY SENSOR	J21,1607
36	FF3-2975-000		1	CABLE, LOWER RETRY SENSOR	J22,1608
37	FF3-4175-000		1	CABLE, VERTICAL PATH CLUTCH	J1603,1603D
38	FF5-4552-020		4	ROLLER, PAPER PICK-UP	
39	FF5-4634-020		2	ROLLER, PAPER SEPARATION	
40	FF5-4903-000		1	PLATE, PIVOT	
41	FF6-0297-000		1	PLATE, TENSION, UPPER	
42	FF6-0299-000		1	PLATE, TENSION, LOWER	
43	FH6-1477-000		1	MOTOR, DC24V	M2 J1602
44	FH6-5005-000		1	CLUTCH, ELECTRO MAGNETIC	CL1 J1603D
45	FH6-5020-000		1	SOLENOID	SL1 J1604
46	FH7-7462-000		2	PHOTO-INTERRUPTER	PS2,3 J21,22
47	FS5-1164-000		1	BUSHING, UPPER ROLLER	
48	FS5-1589-000		1	BUSHING	
49	FS5-1948-000		5	BUSHING	
50	FS5-3620-000		1	PULLEY, 32T/40T	
51	FS5-3821-000		1	PULLEY, 40T/GEAR, 16T	
52	FS5-3823-000		1	PULLEY, 40T	
53	FS5-3830-000		1	PULLEY, 25T/GEAR, 28T	
54	FS5-3831-000		1	PULLEY, 40T	
55	FS5-3833-000		1	PULLEY, 24T	
56	FS5-6487-000		2	WASHER	
57	FS6-0564-000		2	GEAR, 35T	
58	FS6-0565-000		2	GEAR, 42T	
59	FS6-0569-000		1	GEAR, 14T	

FIGURE & KEY NO.	PART NUMBER	RANK	Q'TY	DESCRIPTION	SERIAL NUMBER / REMARKS
Z40 - 60	FS6-0570-000		1	GEAR, 35T/44T	
61	FS6-0572-000		1	GEAR, 16T	
62	FS6-0574-000		1	GEAR, 38T	
63	FS6-0576-000		1	GEAR, 86T	
64	FS6-0631-000		1	GEAR, 24T	
65	FS6-2328-020		2	SPRING, TENSION	
66	FS6-2330-000		2	SPRING, COMPRESSION	
67	FS6-2900-000		2	SPRING, TENSION	
68	FS7-0103-000		1	GEAR, 35T	
69	FS7-0104-000		1	GEAR, 24T	
70	FS7-0105-000		1	GEAR, 35T	
71	FS7-2413-000		1	SPRING, TENSION	
72	FS7-2414-000		1	SPRING, TENSION	
73	FS7-2775-000		1	SPRING, TENSION	
74	RB1-6539-000		2	DAMPER	
75	RB1-6588-000		2	LIMITER, TORQUE	
76	RB1-6592-000		2	GEAR, 3T	
77	XA9-0591-000		AR	SCREW,M3X8	
78	XA9-0679-000		1	SCREW,MACH.,FLAT HEAD,M3X4	
79	XA9-0724-000		15	SCREW,RS,M3X8	
80	XD9-0104-000		2	PIN,DOWEL	
81	XD9-0131-000		10	RING,E	
82	XD9-0131-000		2	RING,E	
83	XF2-1121-540		1	BELT, TIMING	
84	XF2-3110-840		1	BELT, TIMING	
85	XG3-8012-355		2	BALL BEARING, NSK MF128ZZ1MC3	
86	FF6-0108-000		1	HOLDER, ROLLER, UPPER	
87	FF6-0109-000		1	HOLDER, ROLLER, LOWER	
88	FB3-2889-000	N	1	MOUNT, LIFTER, LOWER	
501	XB1-2300-409		1	SCREW,MACH.,TRUSS HEAD,M3X4	

COPYRIGHT ©2002 CANON INC.

FIGURE & KEY NO.	PART NUMBER	RANK	Q'TY	DESCRIPTION	SERIAL NUMBER / REMARKS
Z40 - 502	XD3-1200-122		4	PIN,SPRING	
503	XD1-1108-225		1	SHIM	
504	XD2-2100-402		2	RING,GRIP	
505	XD2-2100-802		1	RING,GRIP	

FIGURE Z90 DC CONTROLLER PCB ASSEMBLY

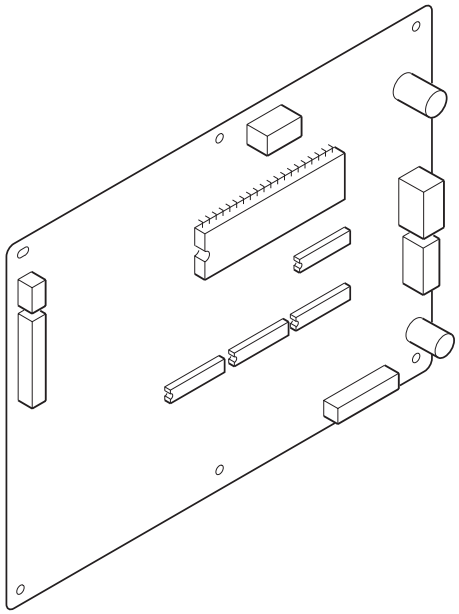

FIGURE & KEY NO.	PART NUMBER	RANK	Q'TY	DESCRIPTION	SERIAL NUMBER / REMARKS
Z90 -	FG6-0770-000		1	DC CONTROLLER PCB ASSEMBLY	

COPYRIGHT © 2002 CANON INC.

FIGURE Z91 PEDESTAL PICK-UP PCB ASSEMBLY

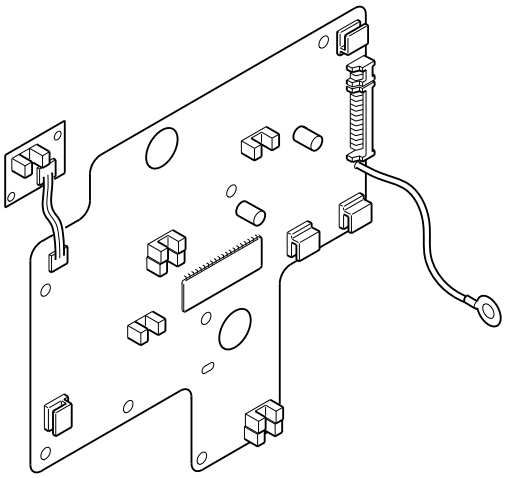

NOTE : This assembly is included in the assembly shown in Figure Z40.

FIGURE & KEY NO.	PART NUMBER	RANK	Q'TY	DESCRIPTION	SERIAL NUMBER / REMARKS
Z91 -	FG6-0767-000		1	PAPER PICK-UP PCB ASSEMBLY	SEE NOTE

FIGURE ZB1 LIST OF CONNECTORS

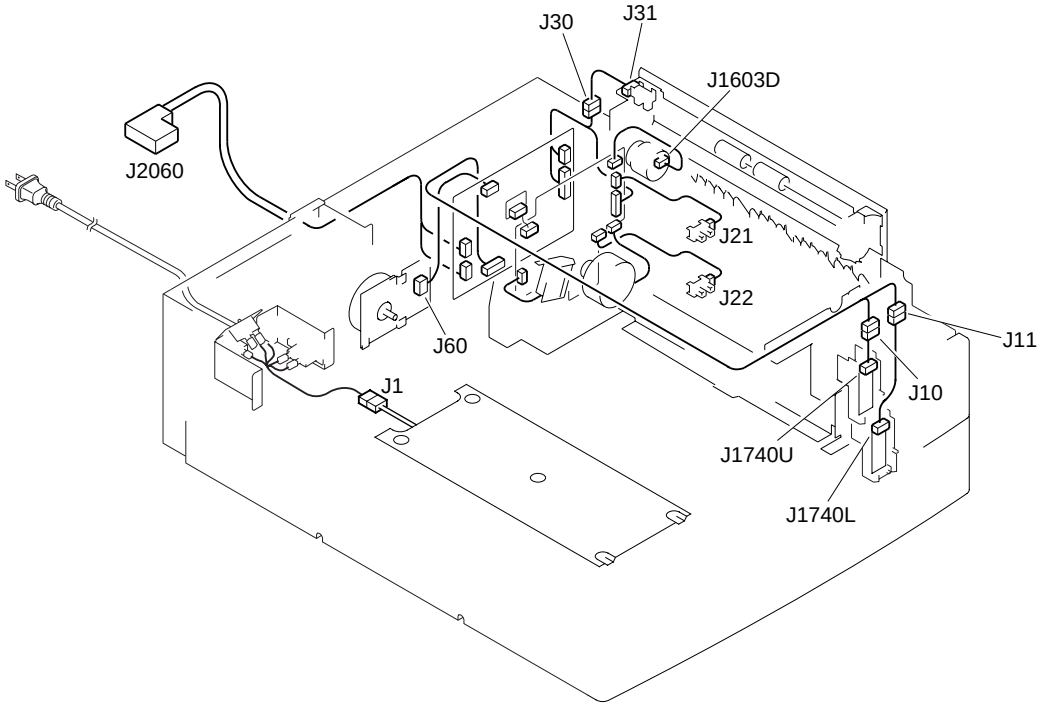

COPYRIGHT © 2002 CANON INC.

FIGURE & KEY NO.	PART NUMBER	RANK	Q'TY	DESCRIPTION	SERIAL NUMBER / REMARKS
Z B1 -	NPN		RF	LIST OF CONNECTORS	
J1	NPN			CASSETTE HEATER	ACCESSORY 100V H1
	VS4-0002-002		1	CONNECTOR, 2P, FEMALE	ACCESSORY 100V
	WS4-0217-000		2	SOCKET CONTACT, 22-18AWG	ACCESSORY 100V
J10	VS1-0842-006		1	CONNECTOR, 6P, FEMALE	
	VS1-6321-006		1	CONNECTOR, 6P, FEMALE	
	VS1-5057-006		1	CONNECTOR, SNAP TIGHT	
J11	VS1-0842-006		1	CONNECTOR, 6P, FEMALE	
	VS1-6320-006		1	CONNECTOR, 6P, FEMALE	
	VS1-5057-006		1	CONNECTOR, SNAP TIGHT	
J21	NPN			CASSETTE 3 RETRY SENSOR	PS2
	VS1-6321-003		1	CONNECTOR, 3P, FEMALE	
J22	NPN			CASSETTE 4 RETRY SENSOR	PS3
	VS1-6321-003		1	CONNECTOR, 3P, FEMALE	
J30	VS1-0842-003		1	CONNECTOR, 3P, FEMALE	
	VS1-6321-003		1	CONNECTOR, 3P, FEMALE	
	VS1-5057-003		1	CONNECTOR, SNAP TIGHT	
J31	NPN			RIGHT DOOR SENSOR	PS1
	VS1-0842-003		1	CONNECTOR, 3P, FEMALE	
J60	NPN			PEDESTAL MAIN MOTOR	M1
	VS3-0312-004		1	CONNECTOR, 4P, MALE	
	WS3-5005-000		4	SOCKET CONTACT, 24-28AWG	
J650	PCB			PEDESTAL CONTROLLER	
	VS3-5083-004		1	CONNECTOR, 4P, FEMALE	
	WS3-5160-000		3	SOCKET CONTACT, 18-24AWG	
J651	PCB			PEDESTAL CONTROLLER	
	VS1-0842-007		1	CONNECTOR, 7P, FEMALE	
J652	PCB			PEDESTAL CONTROLLER	
	VS1-6314-014		1	CONNECTOR, 14P, MALE	
J655	PCB			PEDESTAL CONTROLLER	

FIGURE & KEY NO.	PART NUMBER	RANK	Q'TY	DESCRIPTION	SERIAL NUMBER / REMARKS
Z B1 - J655	VS1-6314-018		1	CONNECTOR, 18P, MALE	
J656	PCB			PEDESTAL CONTROLLER	
	VS1-6314-003		1	CONNECTOR, 3P, MALE	
J657	PCB			PEDESTAL CONTROLLER	
	VS3-0312-004		1	CONNECTOR, 4P, MALE	
	WS3-5005-000		4	SOCKET CONTACT, 24-28AWG	
J1601	PCB			PEDESTAL PICK-UP	
	VS1-6314-018		1	CONNECTOR, 18P, MALE	
J1602	PCB			PEDESTAL PICK-UP	
	NPN			CASSETTE PICK-UP MOTOR	M2
J1603	PCB			PEDESTAL PICK-UP	
	VS1-6321-004		1	CONNECTOR, 4P, FEMALE	
J1603D	NPN			VERTICAL PATH ROLLER CLUTCH	CL1
	VS1-6314-003		1	CONNECTOR, 3P, MALE	
J1604	PCB			PEDESTAL PICK-UP	
	NPN			PICK-UP ROLLER DOWN SOLENOID	SL1
J1607	PCB			PEDESTAL PICK-UP	
	VS1-6314-003		1	CONNECTOR, 3P, MALE	
J1608	PCB			PEDESTAL PICK-UP	
	VS1-6321-003		1	CONNECTOR, 3P, FEMALE	
J1740L	NPN			CASSETTE 4 SIZE SENSOR	S2
	VS1-6023-006		1	CONNECTOR, 6P, FEMALE	
J1740U	NPN			CASSETTE 3 SIZE SENSOR	S1
	VS1-6023-006		1	CONNECTOR, 6P, FEMALE	
J2060	SYS			COPIER	
	FH2-6481-000		1	HOUSING	
	VS1-5452-008		1	CONNECTOR, 8P, FEMALE	
	WS3-5018-000		4	SOCKET, CONTACT, AWG18-24	

COPYRIGHT ©2002 CANON INC.

FIGURE ZB2 LIST OF ELECTRIC PARTS

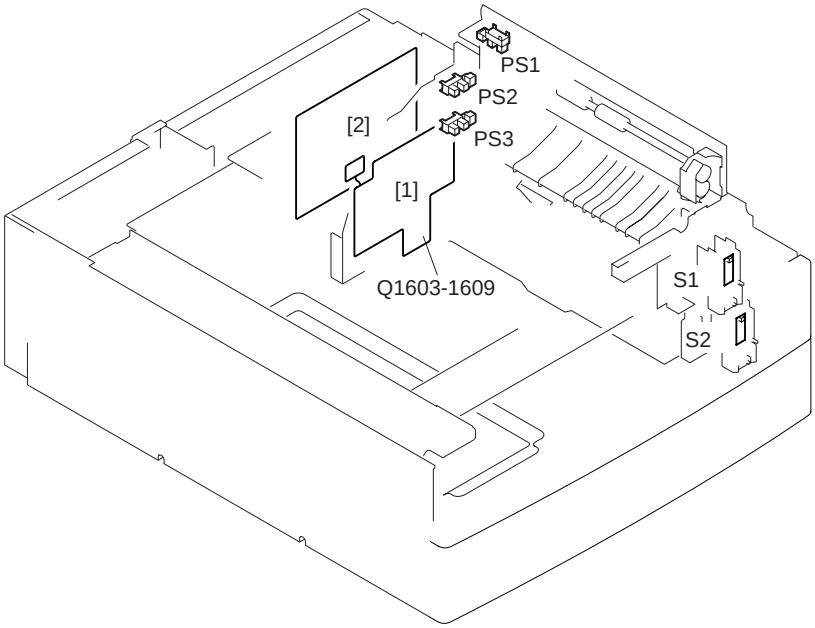

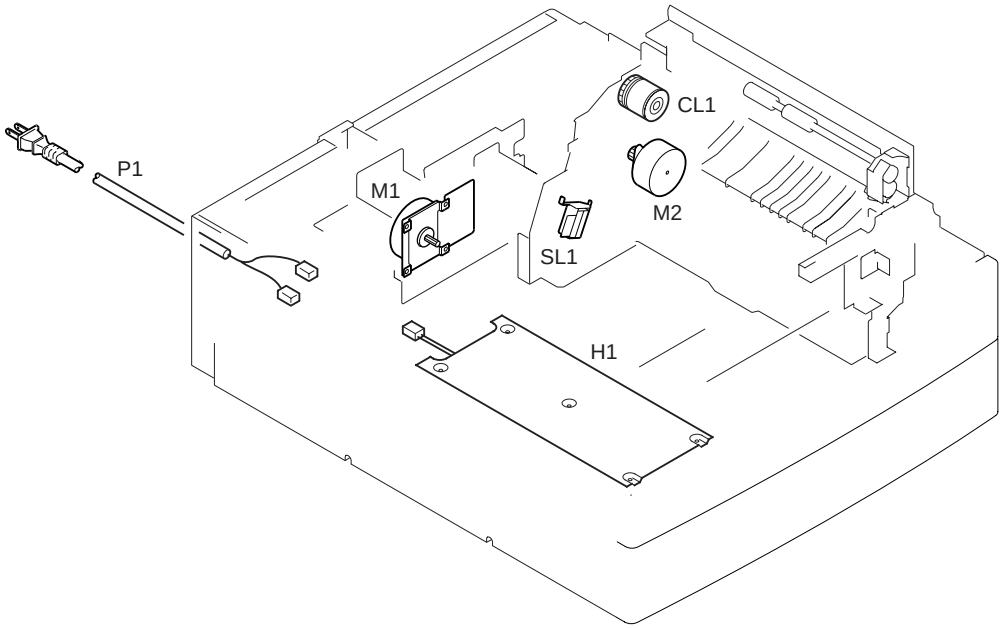

COPYRIGHT © 2002 CANON INC.

FIGURE & KEY NO.	PART NUMBER	RANK	Q'TY	DESCRIPTION	SERIAL NUMBER / REMARKS
Z B2 -	NPN		RF	LIST OF ELECTRIC PARTS	
1	FG6-0767-000		1	PAPER PICK-UP PCB ASSEMBLY	
2	FG6-0770-000		1	DC CONTROLLER PCB ASSEMBLY	
CL1	FH6-5005-000		1	CLUTCH, ELECTRO MAGNETIC	
H1	FH7-4576-000		1	HEATER, CASSETTE	ACCESSORY 100V
M1	FH6-1523-000		1	MOTOR, DC24V	
M2	FH6-1477-000		1	MOTOR, DC24V	
P1	FH2-6706-000		1	CORD, POWER	ACCESSORY 100V
PS1	FH7-7394-000		1	PHOTO-INTERRUPTER	
PS2	FH7-7462-000		1	PHOTO-INTERRUPTER	
PS3	FH7-7462-000		1	PHOTO-INTERRUPTER	
Q1603	FG6-0767-000		1	PAPER PICK-UP PCB ASSEMBLY	
Q1604	FG6-0767-000		1	PAPER PICK-UP PCB ASSEMBLY	
Q1605	FG6-0767-000		1	PAPER PICK-UP PCB ASSEMBLY	
Q1606	FG6-0767-000		1	PAPER PICK-UP PCB ASSEMBLY	
Q1607	FG6-0767-000		1	PAPER PICK-UP PCB ASSEMBLY	
Q1608	FG6-0767-000		1	PAPER PICK-UP PCB ASSEMBLY	
Q1609	FG6-0767-000		1	PAPER PICK-UP PCB ASSEMBLY	
S1	FG3-1761-000		1	SIZE SENSOR PCB ASSEMBLY	
S2	FG3-1896-000		1	CASSETTE SIZE SENSOR PCB ASS'Y	
SL1	FH6-5020-000		1	SOLENOID	

Paper Deck - L1

A4 SIZE	F25 - 5501	XDS00001-
LTR SIZE	F25 - 5511	XDT00001-

CONTENTS

RA. ASSEMBLY LOCATION DIAGRAM

R01. MOUNTING HARDWARE

R10. EXTERNAL COVERS, PANELS, ETC
R11. INTERNAL COMPONENTS

R30. PAPER STOCK ASSEMBLY
R35. PAPER DECK HEATER ASSEMBLY (ACCESSORY)

R40. PAPER PICK-UP ASSEMBLY

RB1. LIST OF CONNECTORS
RB2. LIST OF ELECTRIC PARTS

D4. NUMERICAL INDEX

COPYRIGHT ©2002 CANON INC.

FIGURE RA ASSEMBLY LOCATION DIAGRAM

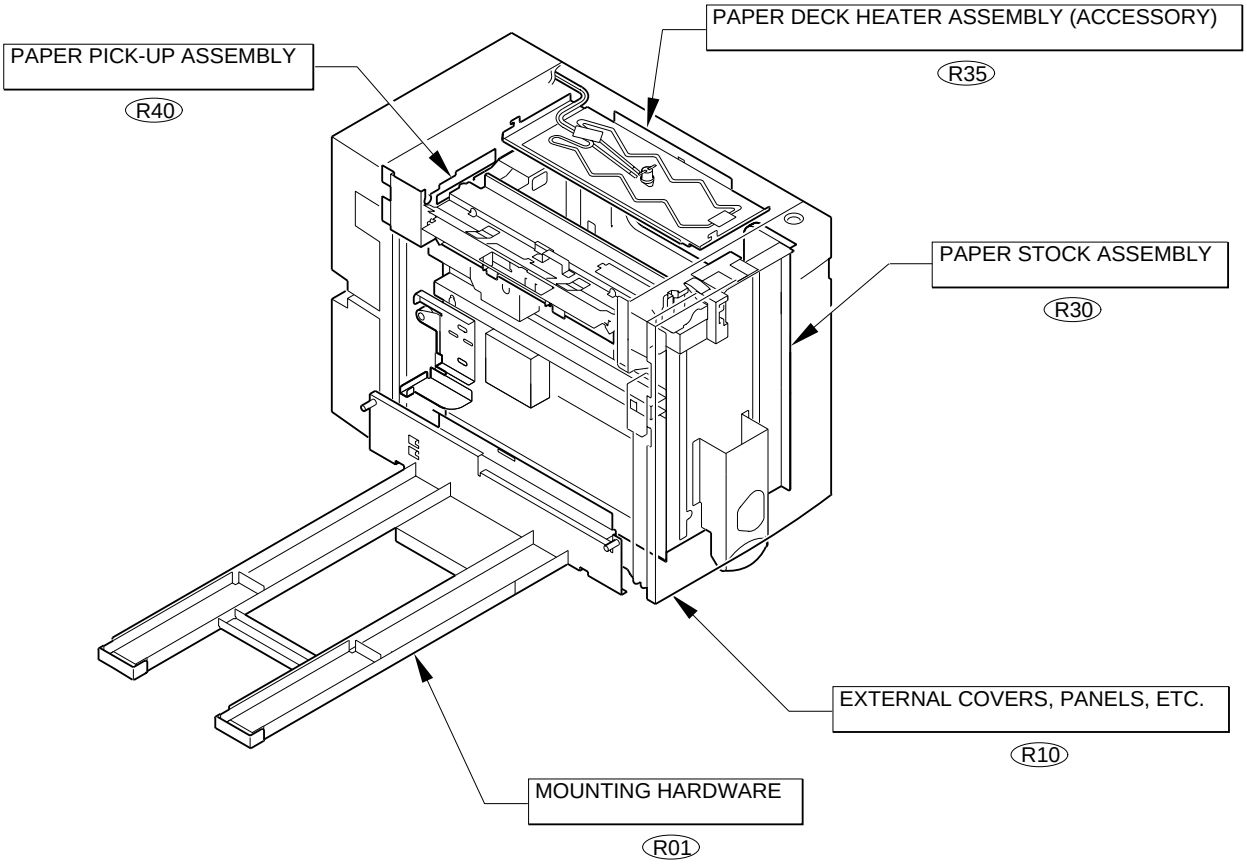

FIGURE R01 MOUNTING HARDWARE

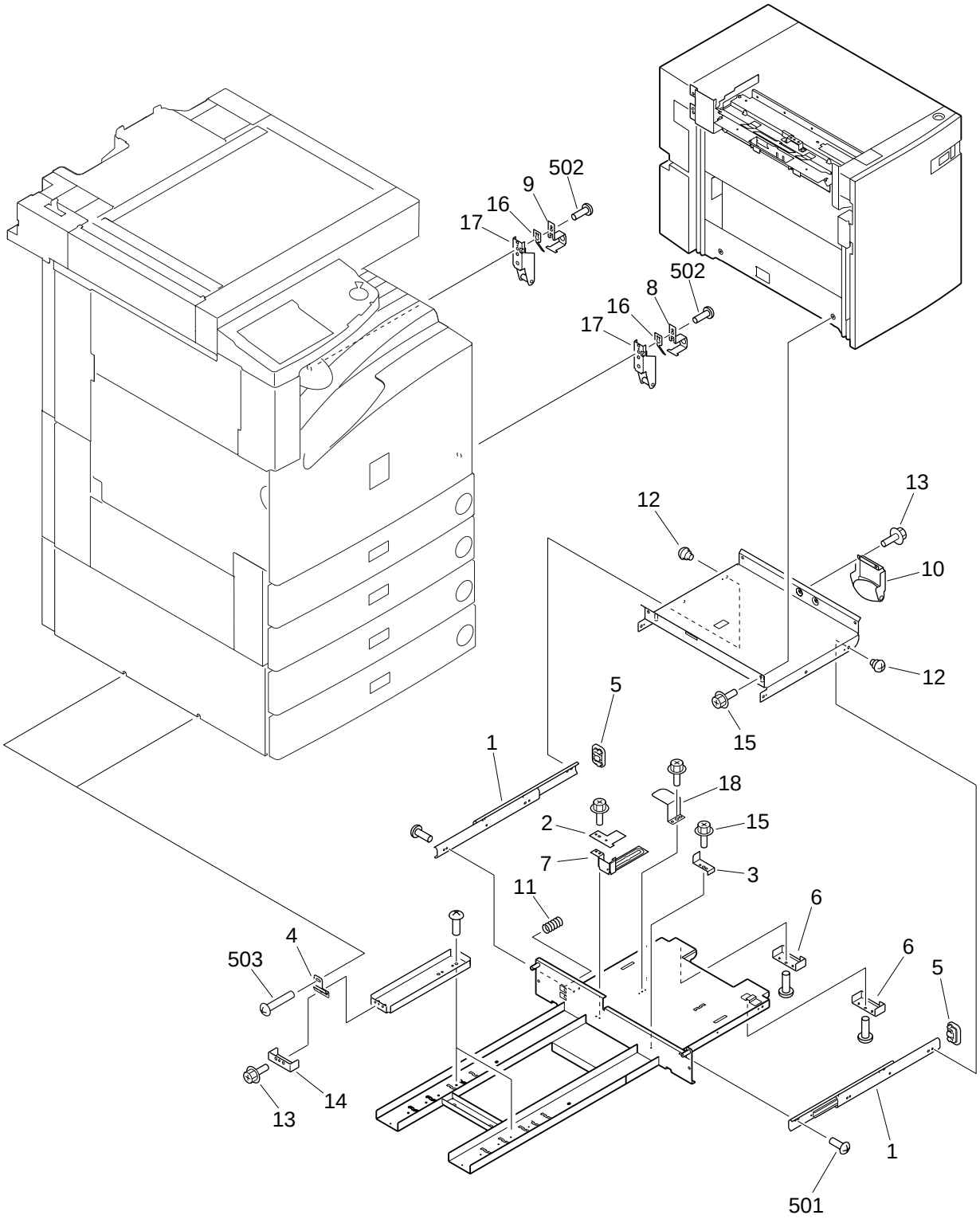

COPYRIGHT © 2002 CANON INC.

FIGURE & KEY NO.	PART NUMBER	RANK	Q'TY	DESCRIPTION	SERIAL NUMBER / REMARKS
R01 -	NPN		RF	MOUNTING HARDWARE	
1	FB4-4867-000		2	RAIL, FRAME SLIDE	
2	FB4-4937-000		1	FLAG, SLIDE, UPPER	
3	FB4-4919-000		1	PLATE, DECK STOPPER	
4	FB4-4920-000		2	PLATE, CROSSMEMBER SUPPORT	
5	FB4-4932-000		2	CAP, RAIL	
6	FB4-4933-000		2	COVER, BOTTOM CROSSMEMBER	
7	FB4-4938-000		1	FLAG, SLIDE, LOWER	
8	FB4-6576-000		1	PLATE, LATCH, FRONT	
9	FB4-6577-000		1	PLATE, LATCH, REAR	
10	FF6-0315-000		1	SUPPORT, ROLLER	
11	FS6-2897-000		1	SPRING, COMPRESSION	
12	FS1-9002-000		3	SCREW,STEPPED,M4X5	
13	XA9-0732-000		5	SCREW,RS,M4X8	
14	FB4-4939-000		2	COVER, BOTTOM CROSSMEMBER, 2	
15	XA9-0732-000		AR	SCREW,RS,M4X8	
16	FB4-6578-000		2	SPRING, LEAF	
17	FF6-0316-000		2	PLATE, LATCH	
18	FB4-4918-000		1	PLATE, DECK SENSOR FLAG	
501	XB1-2400-609		15	SCREW,MACH.,TRUSS HEAD,M4X6	
502	XB1-2400-809		4	SCREW,MACH.,TRUSS HEAD,M4X8	
503	XB1-2401-207		2	SCREW,MACH.,TRUSS HEAD,M4X12	

FIGURE R10 EXTERNAL COVERS, PANALS, ETC.

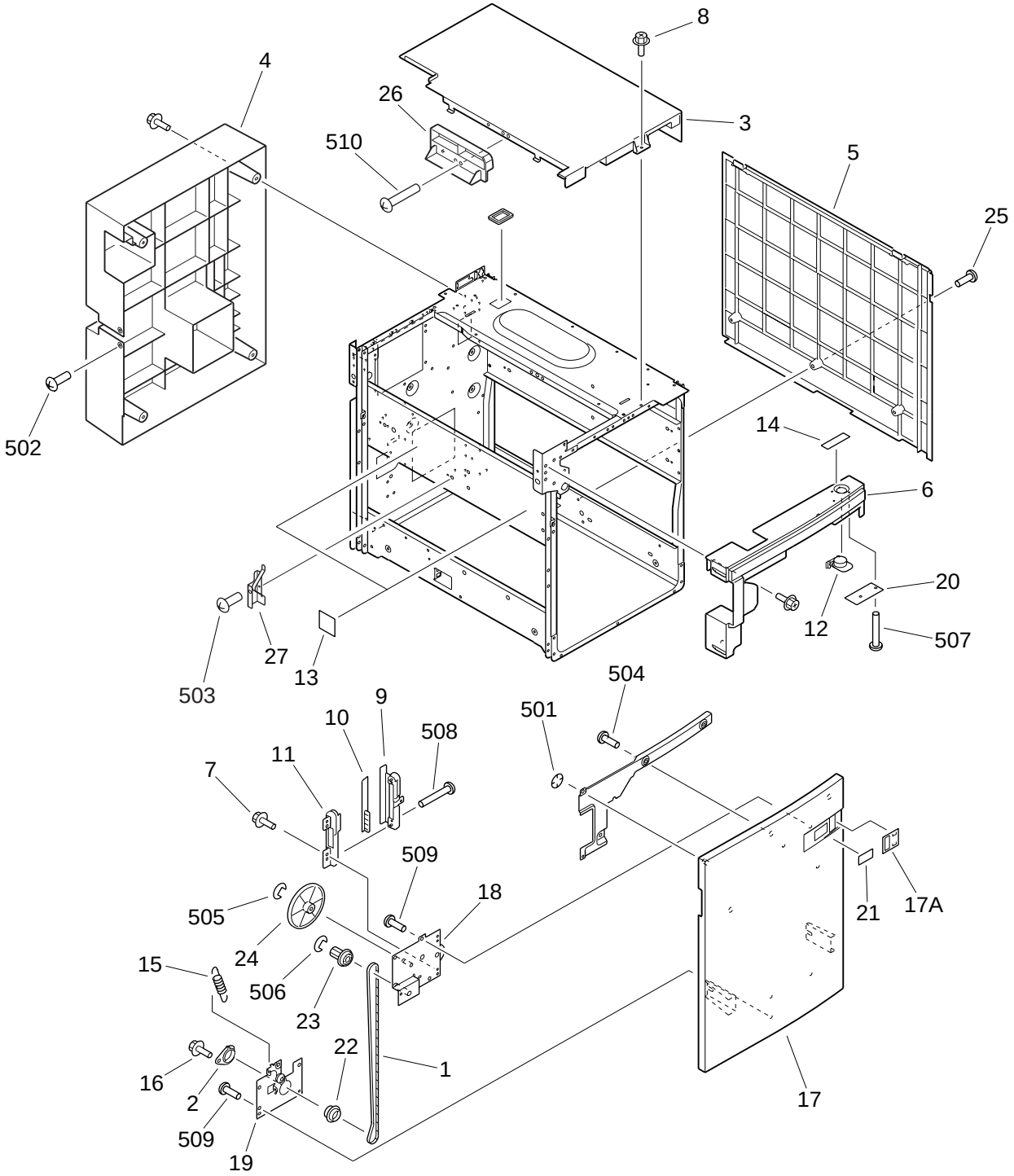

COPYRIGHT © 2002 CANON INC.

FIGURE & KEY NO.	PART NUMBER	RANK	Q'TY	DESCRIPTION	SERIAL NUMBER / REMARKS
R10 -	NPN		RF	EXTERNAL COVERS, PANELS, ETC	
1	XF2-3228-532		1	BELT,DRIVE	
2	FB3-9270-000		1	BUSHING	
3	FB4-4926-000		1	COVER, UPPER	
4	FB5-5423-000		1	COVER, REAR	
5	FB5-5424-000		1	COVER, RIGHT	
6	FB4-4925-000		1	COVER, SWITCH	
7	XA9-0732-000		2	SCREW,RS,M4X8	
8	XA9-0732-000		AR	SCREW,RS,M4X8	
9	FB3-9291-000		1	MOUNT, PAPER INDEX, RIGHT	
10	FB3-9292-000		1	TAPE, PAPER INDEX	
11	FB3-9293-000		1	MOUNT, PAPER INDEX, LEFT	
12	FB3-9711-000		1	BUTTON, RELEASE	
13	FB3-9749-000		2	LABEL, "HANDLE"	
14	FB3-9751-000		1	LABEL, "DECK OPEN"	
15	FS6-2677-000		1	SPRING, TENSION	
16	XA9-0732-000		1	SCREW,RS,M4X8	
17	FF5-8912-000		1	COVER, FRONT	
17A	FB3-9732-000		1	PANEL, PAPER INDEX	
18	FF5-6163-000		1	PAPER QUANTITY INDICATOR UNIT	
19	FF5-6164-020		1	TENSIONER	
20	FG5-9288-000		1	SWITCH PCB ASSEMBLY	
21	FS6-8412-000		1	SHEET, PAPER SIZE	
22	FS7-0423-000		1	PULLEY,41T	
23	FS6-0912-000		1	PULLEY, 32T/GEAR, 15T	
24	FS6-0913-000		1	GEAR, 18T/96T	
25	XA9-0266-000		1	SCREW,W/WASHER,M4X8	
26	FB5-5425-000		1	COVER, HANDLE	
27	FB5-5430-020		1	PLATE, SLOPE GUIDE	
501	XD2-2300-402		1	RING,TOOTHED LOCK	

FIGURE & KEY NO.	PART NUMBER	RANK	Q'TY	DESCRIPTION	SERIAL NUMBER / REMARKS
R10 - 502	XB1-2300-806		2	SCREW,MACH.,TRUSS HEAD,M3X8	
503	XB1-2400-609		2	SCREW,MACH.,TRUSS HEAD,M4X6	
504	XB4-7400-807		3	SCREW,TAPPING,TRUSS HEAD,M4X8	
505	XD2-1100-502		1	RING,E	
506	XD2-1100-642		1	RING,E	
507	XB4-7301-209		2	SCREW,TAPPING,TRUSS HEAD,M3X12	
508	XB4-7301-209		2	SCREW,TAPPING,TRUSS HEAD,M3X12	
509	XB4-7400-807		5	SCREW,TAPPING,TRUSS HEAD,M4X8	
510	XB4-7401-006		1	SCREW,TAPPING,TRUSS HEAD,M4X10	

COPYRIGHT ©2002 CANON INC.

FIGURE R11 INTERNAL COMPONENTS

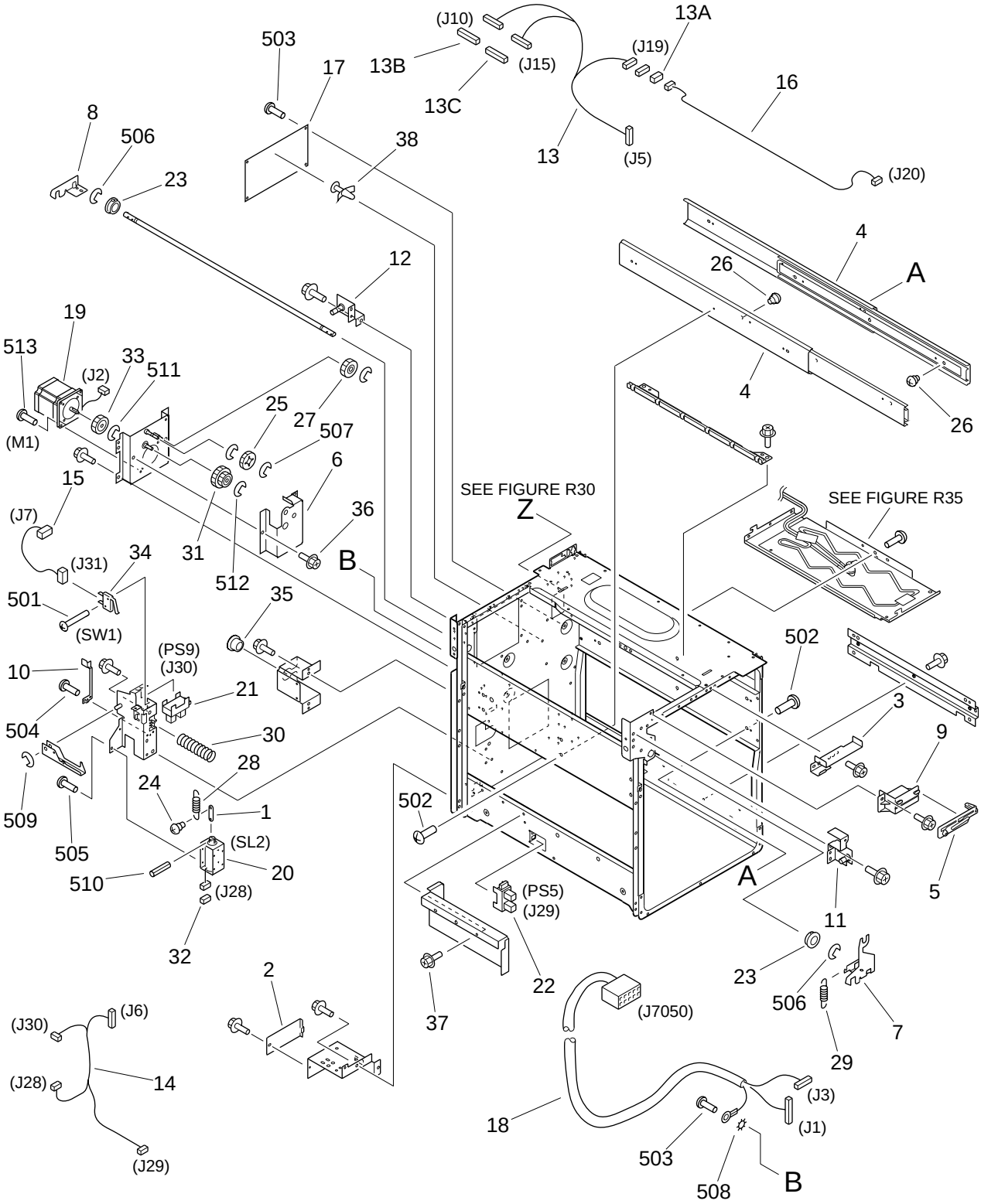

COPYRIGHT ©2002 CANON INC.

FIGURE & KEY NO.	PART NUMBER	RANK	Q'TY	DESCRIPTION	SERIAL NUMBER / REMARKS
R11 -	NPN		RF	INTERNAL COMPONENTS	
1	FA6-7751-000		1	ARM, LOCK	
2	FB2-8293-000		1	COVER, CONNECTOR	
3	FB3-9260-000		1	PLATE, CAM RELEASE	
4	FB3-9261-000		2	RAIL, SLIDE	
5	FB3-9290-000		1	LINK, RELEASE LEVER	
6	FB5-5422-000		1	COVER, GEAR	
7	FB4-4877-000		1	HOOK, FRONT	
8	FB4-4878-000		1	HOOK, REAR	
9	FB4-4922-000		1	COVER, RELEASE LEVER	
10	FB4-4929-000		1	SPRING, LEAF	
11	FF5-7535-000		1	PIN, DECK, FRONT	
12	FF5-7536-000		1	PIN, DECK, REAR	
13	FG3-1712-000		1	CABLE, FRAME, 1	J5,10,15,19
13A	VS1-5057-004		1	CONNECTOR, SNAP TIGHT	J19
13B	VS1-5057-010		1	CONNECTOR, SNAP TIGHT	J10
13C	VS1-5057-014		1	CONNECTOR, SNAP TIGHT	J15
14	FG6-2528-000		1	CABLE, FRAME, 2	J6,28-30
15	FG6-2529-000		1	CABLE, PAPER STOCK SWITCH	J7,31
16	FG6-1646-000		1	CABLE, LED SWITCH	J19,20
17	FG3-1711-000		1	DECK CONTROLLER PCB ASSEMBLY	
18	FG3-1713-000		1	CABLE, INTERFACE	J1,3,7050
19	FH6-1571-000		1	MOTOR, STEPPING, DC24V	M1 J2
20	FH7-5828-000		1	SOLENOID, DC24V	SL2 J28
21	FH7-7462-000		1	PHOTO-INTERRUPTER	PS9 J30
22	FH7-7462-000		1	PHOTO-INTERRUPTER	PS5 J29
23	FS1-1189-000		2	BUSHING	
24	FS1-9009-000		1	SCREW,STEPPED,M3	
25	FS2-0544-000		1	GEAR, 24T	
26	FS2-9343-000		4	SCREW,STEPPED,M4	

FIGURE & KEY NO.	PART NUMBER	RANK	Q'TY	DESCRIPTION	SERIAL NUMBER / REMARKS
R11 - 27	FS2-0545-000		1	GEAR, 28T	
28	FS6-2593-000		1	SPRING, TENSION	
29	FS6-2674-000		1	SPRING, TENSION	
30	FS6-2676-000		1	SPRING, COMPRESSION	
31	FS7-0802-000		1	GEAR, 20T/35T	
32	VS1-5057-002		1	CONNECTOR, SNAP TIGHT	J28
33	FS7-0801-000		1	GEAR, 24T	
34	WC4-5153-000		1	MICRO SWITCH	SW1 J31
35	X62-6825-000		1	BUSHING	
36	XA9-0732-000		16	SCREW,RS,M4X8	
37	XA9-0732-000		2	SCREW,RS,M4X8	
38	VT2-0002-003		1	SPACER, SUPPORT	
501	XB1-2231-009		1	SCREW,MACH.,TRUSS HEAD,M2.3X10	
502	XB1-2400-609		6	SCREW,MACH.,TRUSS HEAD,M4X6	
503	XB1-2400-806		8	SCREW,MACH.,TRUSS HEAD,M4X8	
504	XB1-2400-809		4	SCREW,MACH.,TRUSS HEAD,M4X8	
505	XB6-7300-409		3	SCREW,TP,M3X4	
506	XD2-1100-642		2	RING,E	
507	XD2-1100-642		4	RING,E	
508	XD1-4200-402		1	WASHER,TOOTHED LOCK	
509	XD2-1100-502		1	RING,E	
510	XD3-1300-102		1	PIN,SPRING	
511	XD2-1100-402		1	RING,E	
512	XD2-1100-502		1	RING,E	
513	XB1-2400-609		2	SCREW,MACH.,TRUSS HEAD,M4X6	

COPYRIGHT ©2002 CANON INC.

FIGURE R30 PAPER STOCK ASSEMBLY

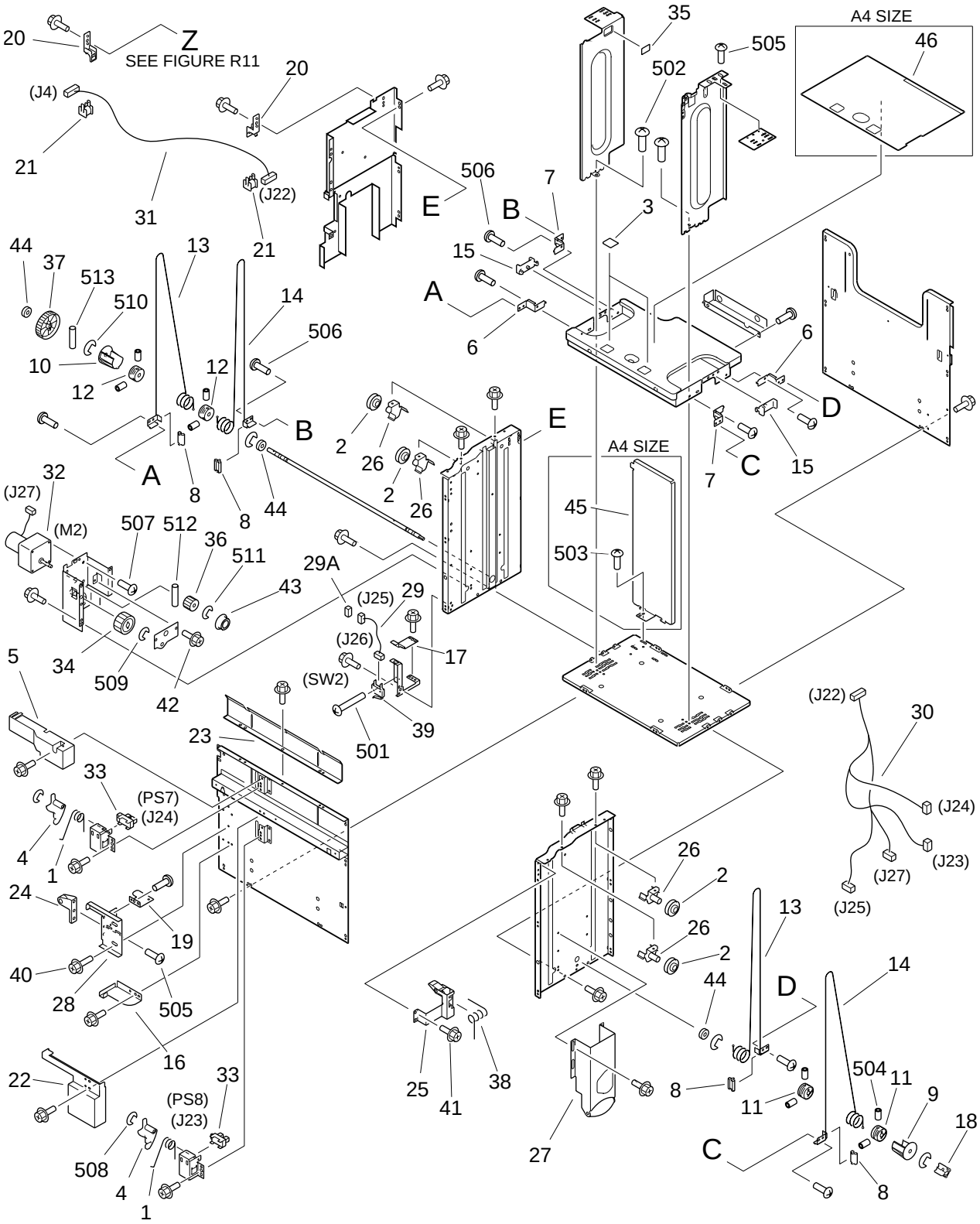

NOTE:This assembly does not include the parts shown with key No. 16,18,27,45,46 and 503.

COPYRIGHT ©2002 CANON INC.

FIGURE & KEY NO.	PART NUMBER	RANK	Q'TY	DESCRIPTION	SERIAL NUMBER / REMARKS
R30 -	FG6-3577-000		1	PAPER STOCK ASSEMBLY	
1	FB5-0553-000		2	SPRING, TORSION	
2	FA6-8257-000		4	PULLEY	
3	FB2-7740-020		2	SHEET, SEPARATION	
4	FB2-9248-000		2	ARM, PAPER SENSOR	
5	FB3-9235-000		1	COVER, SENSOR	
6	FB3-9237-000		2	PLATE, WIRE STOP, RIGHT	
7	FB3-9238-000		2	PLATE, WIRE STOP, LEFT	
8	FB3-9240-000		4	BLOCK, WIRE GUIDE	
9	FB3-9241-000		1	GUIDE, PULLEY, FRONT	
10	FB3-9242-000		1	GUIDE, PULLEY, REAR	
11	FB3-9243-000		2	PULLEY, DRIVE, FRONT	
12	FB3-9244-000		2	PULLEY, DRIVE, REAR	
13	FB4-9706-000		2	WIRE, DRIVE, RIGHT	
14	FB4-9705-000		2	WIRE, DRIVE, LEFT	
15	FB3-9714-000		2	BLOCK, LIFTER PLATE SLIDE	
16	FB3-9720-000		1	PLATE, PAPER STOCK STOP	SEE NOTE
17	FB3-9723-000		1	SPRING, LEAF	
18	FB3-9735-000		1	COUPLING	SEE NOTE
19	FB3-9742-000		1	FLAG, PAPER STOCK SENSOR	
20	FB4-4873-000		2	CLAMP, CORD, UPPER	
21	FB4-4874-000		2	CLAMP, CORD, LOWER	
22	FB4-4882-000		1	COVER, SENSOR, LOWER	
23	FB4-4928-000		1	PLATE, SEPARATION	
24	FF5-5282-030		1	HOLDER, LATCH	
25	FF5-6148-000		1	LEVER, RELEASE	
26	FF5-6160-000		4	MOUNT, PULLEY	
27	FF5-6161-000		1	MOUNT, ROLLER	SEE NOTE
28	FF5-6171-000		1	PLATE, LOCK	
29	FG6-1642-000		1	CABLE, SWITCH	J25,26

FIGURE & KEY NO.	PART NUMBER	RANK	Q'TY	DESCRIPTION	SERIAL NUMBER / REMARKS
R30 - 29A	VS1-5057-003		1	CONNECTOR, SNAP TIGHT	J25
30	FG6-2534-000		1	CABLE, PAPER STOCK	J22-25,27
31	FG6-2531-000		1	CABLE, PAPER STOCK CONNECTING	J4,22
32	FH7-1791-020		1	MOTOR, DC24V	M2 J27
33	FH7-7312-000		2	PHOTO-INTERRUPTER	PS7,8 J24,23
34	FS2-0450-000		1	GEAR, 32T	
35	FS5-8618-000		1	LABEL, "MAXIMUM LOAD"	
36	FS6-0722-000		1	GEAR, 19T	
37	FS6-0909-000		1	GEAR, 58T	
38	FS6-2673-000		1	SPRING, TORSION	
39	WC4-0153-000		1	MICROSWITCH	SW2 J26
40	XA9-0721-000		2	SCREW,RS,M4X10	
41	XA9-0732-000		47	SCREW,RS,M4X8	
42	XA9-0732-000		2	SCREW,RS,M4X8	
43	XG3-6012-405		1	BALL BEARING, NSK MF126ZZ	
44	XG9-0250-000		3	BEARING, BALL	
45	FB4-9713-000		1	PLATE, END LIMIT	A4 SIZE SEE NOTE
46	FB5-7009-000		1	SHEET, DECK	A4 SIZE SEE NOTE
501	XB1-2231-009		1	SCREW,MACH.,TRUSS HEAD,M2.3X10	
502	XB1-2400-609		2	SCREW,MACH.,TRUSS HEAD,M4X6	
503	XB1-2400-609		1	SCREW,MACH.,TRUSS HEAD,M4X6	A4 SIZE SEE NOTE
504	XB6-2400-808		8	SETSCREW,M4X8	
505	XB6-7400-609		5	SCREW,TP,M4X6	
506	XB6-7400-809		14	SCREW,TP,M4X8	
507	XB6-7400-809		4	SCREW,TP,M4X8	
508	XD2-1100-242		2	RING,E	
509	XD2-1100-502		1	RING,E	
510	XD2-1100-642		4	RING,E	
511	XD2-1100-642		1	RING,E	
512	XD3-2200-122		1	PIN,DOWEL	

COPYRIGHT ©2002 CANON INC.

FIGURE & KEY NO.	PART NUMBER	RANK	Q'TY	DESCRIPTION	SERIAL NUMBER / REMARKS
R30 - 513	XD3-2200-182		1	PIN,DOWEL	

FIGURE R35 PAPER DECK HEATER ASSEMBLY (ACCESSORY)

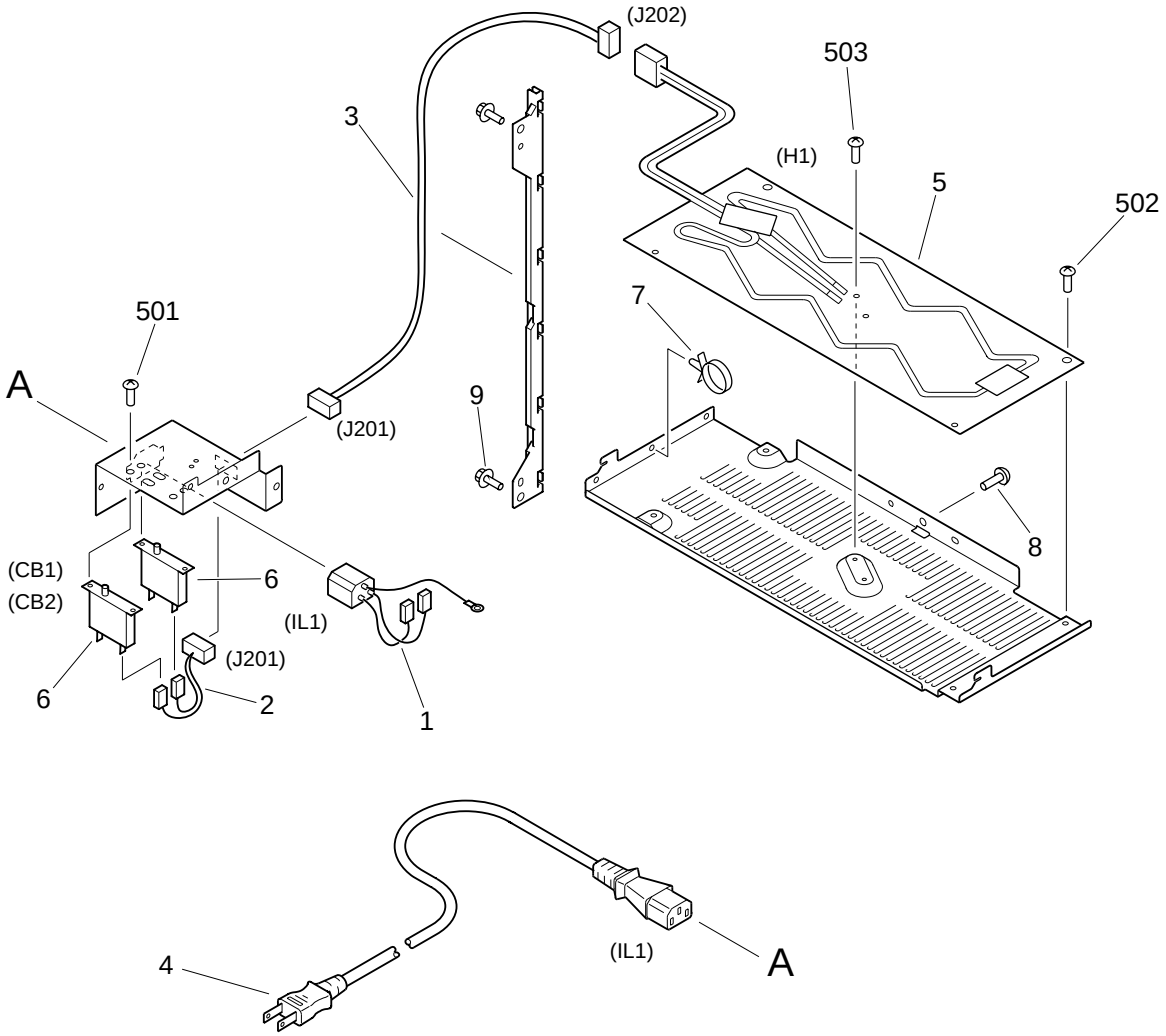

COPYRIGHT ©2002 CANON INC.

FIGURE & KEY NO.	PART NUMBER	RANK	Q'TY	DESCRIPTION	SERIAL NUMBER / REMARKS
R35 -	NPN		RF	PAPER DECK HEATER ASSEMBLY	ACCESSORY 100V
1	FF3-3462-000		1	CABLE, SOCKET	IL1
2	FF3-3464-000		1	CABLE, RELAY	J201
3	FG6-2956-000		1	CABLE, CASSETTE HEATER	J201,202
4	FH2-5759-000		1	CORD, POWER	IL1
5	FH7-4584-000		1	HEATER, CASSETTE	H1 J202
6	VD7-0502-001		2	BREAKER, CIRCUIT, 125VAC 3A	CB1,2
7	WT2-5041-000		1	TIE, CABLE	
8	XA9-0266-000		1	SCREW,W/WASHER,M4X8	
9	XA9-0628-000		2	SCREW,RS,M4X8	
501	XB1-2300-409		4	SCREW,MACH.,TRUSS HEAD,M3X4	
502	XB1-2400-409		4	SCREW,MACH.,TRUSS HEAD,M4X4	
503	XB6-7300-409		1	SCREW,TP,M3X4	

FIGURE R40 PAPER PICK-UP ASSEMBLY

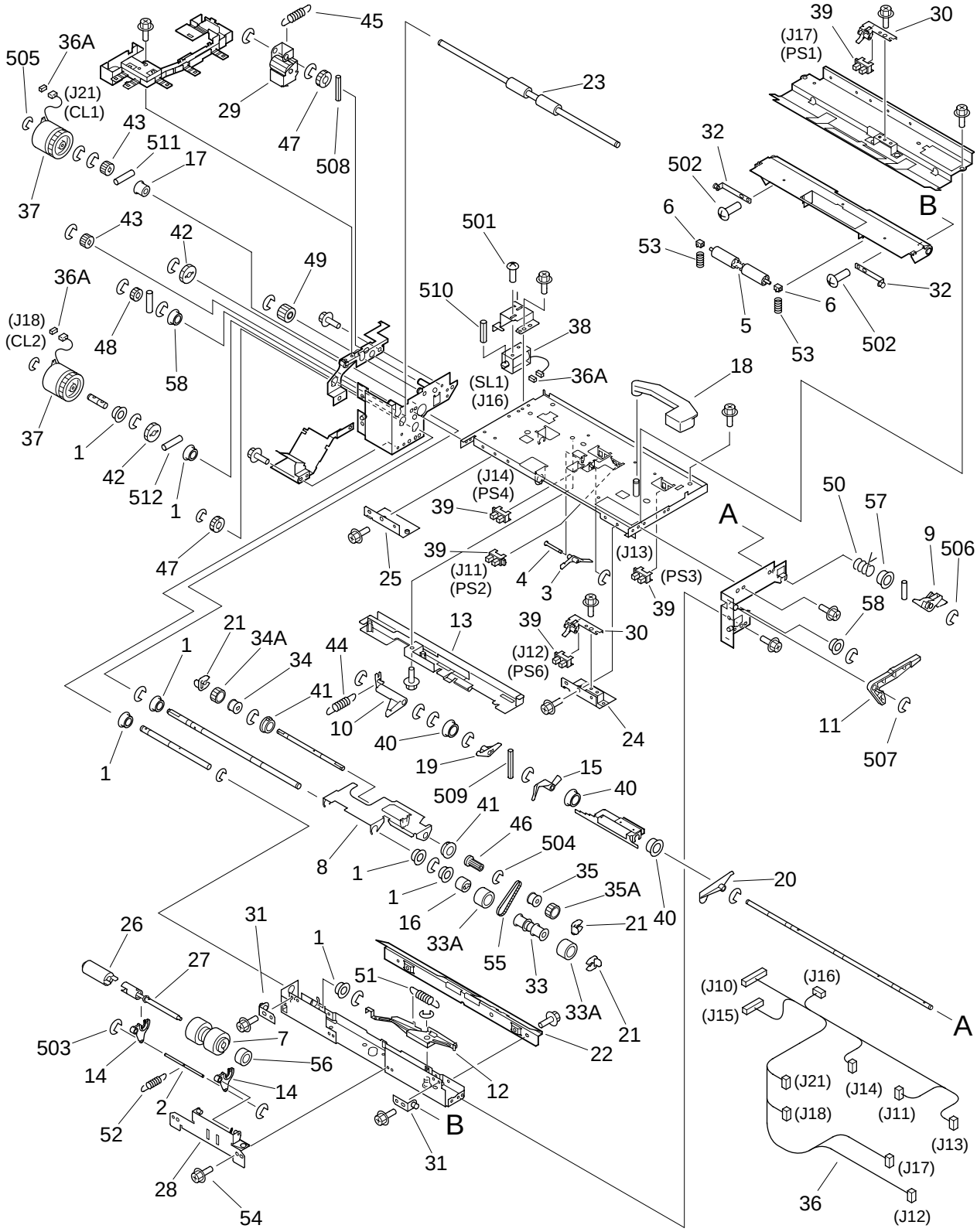

NOTE:This assembly does not include the part shown with key No. 18.

COPYRIGHT ©2002 CANON INC.

FIGURE & KEY NO.	PART NUMBER	RANK	Q'TY	DESCRIPTION	SERIAL NUMBER / REMARKS
R40 -	FG6-6011-000		1	PAPER PICK-UP ASSEMBLY	
1	FA9-2112-000		7	BUSHING	
2	FB4-6227-000		1	SHAFT, COUNTER	
3	FB2-7720-000		1	LEVER, PAPER	
4	FB2-7721-000		1	SHAFT, LEVER	
5	FB2-7754-030		1	ROLLER	
6	FB2-7755-000		2	BUSHING	
7	FB2-7777-020		1	ROLLER, SEPARATION	
8	FB3-9188-020		1	PLATE, PAPER PICK-UP	
9	FB3-9192-020		1	CAM, FRONT	
10	FB3-9193-020		1	ARM, SOLENOID	
11	FB3-9195-020		1	ARM, SEPARATION RELEASE	
12	FB3-9196-020		1	LEVER, SEPARATION RELEASE	
13	FB3-9206-000		1	COVER, SENSOR	
14	FB3-9207-030		2	ARM, SEPARATION ROLLER	
15	FB3-9214-000		1	FLAG, PAPER SENSOR	
16	FB3-9216-000		1	CLUTCH, ONE-WAY, 1	
17	FB3-9217-000		1	CLUTCH, ONE-WAY, 2	
18	FB3-9289-000		1	LEVER, RELEASE	SEE NOTE
19	FB3-9713-000		1	LEVER, PAPER PICK-UP	
20	FB3-9752-000		1	LEVER, LIMITER	
21	FB4-2007-000		3	RING, RETAINING	
22	FB4-2013-000		1	GUIDE, PICK-UP INLET	
23	FB4-4868-000		1	ROLLER, PAPER FEED	
24	FB4-4898-000		1	PLATE, PAPER FEED GUIDE, FRONT	
25	FB4-4899-000		1	PLATE, PAPER FEED GUIDE, REAR	
26	FB2-8422-000		1	TORQUE LIMITER	
27	FF5-6338-000		1	SHAFT, SEPARATION	
28	FF5-6157-020		1	MOUNT, SEPARATION ROLLER	
29	FF5-7529-000		1	SWING GEAR, 20T	

FIGURE & KEY NO.	PART NUMBER	RANK	Q'TY	DESCRIPTION	SERIAL NUMBER / REMARKS
R40 - 30	FF5-7530-000		2	MOUNT, VERT. PATH SENSOR FLAG	
31	FF5-7532-000		2	SUPPORT, GUIDE, LOWER	
32	FF6-1976-000		2	SUPPORT, ROLLER	
33	FF5-7541-000		1	ROLLER, PAPER FEED	
33A	FB4-2034-000		2	ROLLER, FEED	
34	FF5-7829-000		1	ROLLER, PAPER PICK-UP, 1	
34A	FB4-2033-000		1	ROLLER, PICK-UP	
35	FF5-7830-000		1	ROLLER, PAPER PICK-UP, 2	
35A	FB4-2033-000		1	ROLLER, PICK-UP	
36	FG6-1641-000		1	CABLE, PAPER PICK-UP	J10-18,21
36A	VS1-5057-002		3	CONNECTOR, SNAP TIGHT	J16,18,21
37	FH7-5826-000		2	CLUTCH, ELECTROMAGNETIC	CL1,2 J21,18
38	FH7-5827-000		1	SOLENOID	SL1 J16
39	FH7-7462-000		5	PHOTO-INTERRUPTER	PS1-4,6 J17,11,13,14,12
40	FS1-1512-000		3	BUSHING	
41	FS1-1569-000		2	BUSHING	
42	FS2-0484-000		2	GEAR, 25T	
43	FS5-0338-000		2	GEAR, 16T	
44	FS5-2291-000		1	SPRING, TENSION	
45	FS5-2885-000		1	SPRING, TENSION	
46	FS5-3333-000		1	PULLEY, 16T	
47	FS6-0053-020		2	GEAR, 20T	
48	FS6-0091-000		1	GEAR, 16T	
49	FS6-0907-000		1	GEAR, 20T	
50	FS5-7441-000		1	SPRING, TORSION	
51	FS6-2675-000		1	SPRING, TENSION	
52	FS6-2678-000		1	SPRING, TENSION	
53	FS6-2895-000		2	SPRING, COMPRESSION	
54	XA9-0732-000		27	SCREW,RS,M4X8	
55	XF9-0525-000		1	BELT, TIMING, 59T	

COPYRIGHT ©2002 CANON INC.

FIGURE & KEY NO.	PART NUMBER	RANK	Q'TY	DESCRIPTION	SERIAL NUMBER / REMARKS
R40 - 56	XG9-0242-000		1	BEARING, BALL	
57	FS5-7442-000		1	BUSHING	
58	FS1-1189-000		2	BUSHING	
501	XB1-2300-409		2	SCREW,MACH.,TRUSS HEAD,M3X4	
502	XB1-2400-609		2	SCREW,MACH.,TRUSS HEAD,M4X6	
503	XD2-1100-242		2	RING,E	
504	XD2-1100-372		1	RING,E	
505	XD2-1100-402		1	RING,E	
506	XD2-1100-502		10	RING,E	
507	XD2-1100-642		18	RING,E	
508	XD3-1200-122		1	PIN,SPRING	
509	XD3-1200-142		1	PIN,SPRING	
510	XD3-1300-082		1	PIN,SPRING	
511	XD3-2200-102		6	PIN,DOWEL	
512	XD3-2200-142		2	PIN,DOWEL	

FIGURE RB1 LIST OF CONNECTORS

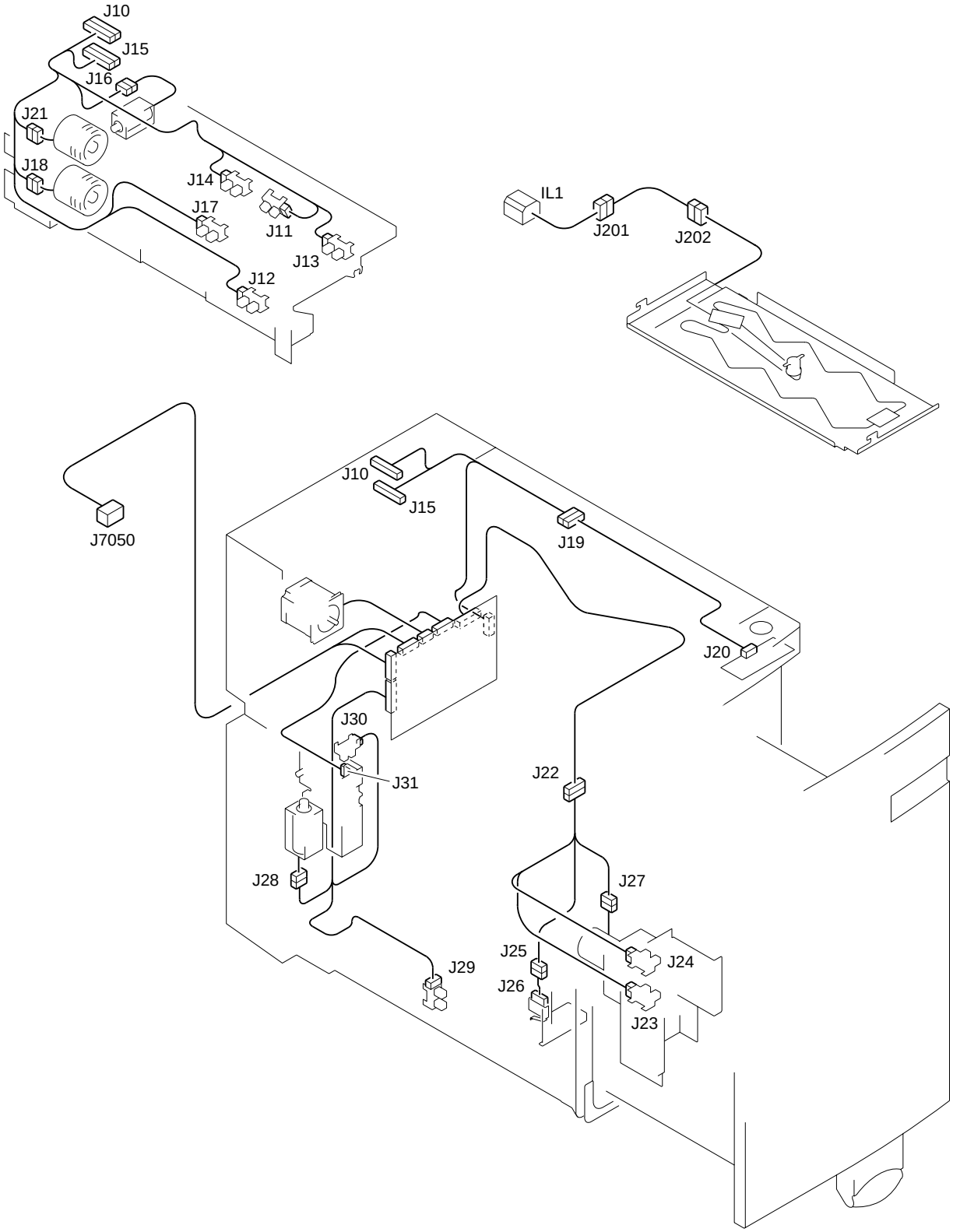

COPYRIGHT ©2002 CANON INC.

FIGURE & KEY NO.	PART NUMBER	RANK	Q'TY	DESCRIPTION	SERIAL NUMBER / REMARKS
R B1 -	NPN		RF	LIST OF CONNECTORS	
IL1	NPN			POWER CORD SUPPLY	ACCESSORY 100V
	WS5-5025-000		1	SOCKET, AC	ACCESSORY 100V
J1	PCB			SIDE DECK DRIVER	
	VS1-0852-007		1	CONNECTOR, 7P, FEMALE	
J2	PCB			SIDE DECK DRIVER	
	NPN			DECK MAIN MOTOR	M1
J3	PCB			SIDE DECK DRIVER	
	VS3-5083-003		1	CONNECTOR, 3P, FEMALE	
	WS3-5160-000		3	SOCKET CONTACT, 18-24AWG	
J4	PCB			SIDE DECK DRIVER	
	VS1-6302-010		1	CONNECTOR, 10P, FEMALE	
	WS3-5569-000		10	PIN, CONTACT	
J5	PCB			SIDE DECK DRIVER	
	VT2-5161-026		1	HOLDER, CONNECTOR, 26P	
	VS1-6313-013		1	CONNECTOR, 13P, FEMALE	
	VS1-6314-013		1	CONNECTOR, 13P, FEMALE	
J6	PCB			SIDE DECK DRIVER	
	VS1-6314-008		1	CONNECTOR, 8P, FEMALE	
J7	PCB			SIDE DECK DRIVER	
	VS1-6302-003		1	CONNECTOR, 3P, FEMALE	
	WS3-5569-000		2	PIN, CONTACT	
J10	VS1-6320-010		1	CONNECTOR, 10P, FEMALE	
	VS1-6321-010		1	CONNECTOR, 10P, FEMALE	
	VS1-5057-010		1	CONNECTOR, SNAP TIGHT	
J11	NPN			DECK PAPER EMPTY SENSOR	PS2
	VS1-6321-003		1	CONNECTOR, 3P, FEMALE	
J12	NPN			DECK PAPER FEED SENSOR	PS6
	VS1-6321-003		1	CONNECTOR, 3P, FEMALE	
J13	NPN			DECK LIFTER UPPER LIMIT SENSOR	PS3

FIGURE & KEY NO.	PART NUMBER	RANK	Q'TY	DESCRIPTION	SERIAL NUMBER / REMARKS
R B1 - J13	VS1-6321-003		1	CONNECTOR, 3P, FEMALE	
J14	NPN			DECK LIFTER POSITION SENSOR	PS4
	VS1-6321-003		1	CONNECTOR, 3P, FEMALE	
J15	VS1-6320-014		1	CONNECTOR, 14P, FEMALE	
	VS1-6321-014		1	CONNECTOR, 14P, FEMALE	
	VS1-5057-014		1	CONNECTOR, SNAP TIGHT	
J16	NPN			DECK ROLLER RELEASE SOLENOID	SL1
	VS1-6321-002		1	CONNECTOR, 2P, FEMALE	
	VS1-5057-002		1	CONNECTOR, SNAP TIGHT	
J17	NPN			DECK PAPER PICK-UP SENSOR	PS1
	VS1-6321-003		1	CONNECTOR, 3P, FEMALE	
J18	NPN			DECK PAPER PICK-UP CLUTCH	CL2
	VS1-6321-002		1	CONNECTOR, 2P, FEMALE	
	VS1-5057-002		1	CONNECTOR, SNAP TIGHT	
J19	VS1-6320-004		1	CONNECTOR, 4P, FEMALE	
	VS1-6321-004		1	CONNECTOR, 4P, FEMALE	
	VS1-5057-004		1	CONNECTOR, SNAP TIGHT	
J20	PCB			LED SWITCH	
	VS1-6321-004		1	CONNECTOR, 4P, FEMALE	
J21	NPN			DECK PAPER FEED CLUTCH	CL1
	VS1-6321-002		1	CONNECTOR, 2P, FEMALE	
	VS1-5057-002		1	CONNECTOR, SNAP TIGHT	
J22	VS1-6373-010		1	CONNECTOR, 10P, FEMALE	
	VS1-6372-010		1	CONNECTOR, 10P, FEMALE	
	WS3-5569-000		10	PIN, CONTACT	
	WS3-5598-000		10	PIN CONTACT	
J23	NPN			DECK PAPER SENSOR	PS8
	VS1-6321-003		1	CONNECTOR, 3P, FEMALE	
J24	NPN			DECK PAPER POSITION SENSOR	PS7
	VS1-6321-003		1	CONNECTOR, 3P, FEMALE	

COPYRIGHT ©2002 CANON INC.

FIGURE & KEY NO.	PART NUMBER	RANK	Q'TY	DESCRIPTION	SERIAL NUMBER / REMARKS
R B1 - J25	VS1-6321-003		2	CONNECTOR, 3P, FEMALE	
	VS1-5057-003		1	CONNECTOR, SNAP TIGHT	
J26	NPN			DECK LOWER DETECT SWITCH	SW2
	RH2-5283-000		1	CONNECTOR, 2P, FEMALE	
	WS3-5419-000		2	SOCKET CONTACT, 22-26AWG	
J27	NPN			DECK LIFTER MOTOR	M2
	VS1-0279-002		1	CONNECTOR, 2P, FEMALE	
	WS3-0437-000		2	SOCKET CONTACT, 20-30AWG	
J28	NPN			DECK OPEN SOLENOID	SL2
	VS1-6321-002		1	CONNECTOR, 2P, FEMALE	
J29	NPN			DECK POSITION SENSOR	PS5
	VS1-6321-003		1	CONNECTOR, 3P, FEMALE	
J30	NPN			DECK OPEN SENSOR	PS9
	VS1-6321-003		1	CONNECTOR, 3P, FEMALE	
J31	NPN			DECK OPEN DETECT SWITCH	SW1
	RH2-5283-000		1	CONNECTOR, 2P, FEMALE	
	WS3-5419-000		2	SOCKET CONTACT, 22-26AWG	
J201	VS4-0001-003		1	CONNECTOR, 3P, MALE	ACCESSORY 100V
	VS4-0002-003		1	CONNECTOR, 3P, FEMALE	ACCESSORY 100V
	WS4-0219-000		2	PIN CONTACT, 18-22AWG	ACCESSORY 100V
	WS4-0217-000		2	SOCKET CONTACT, 22-18AWG	ACCESSORY 100V
J202	NPN			DECK HEATER	ACCESSORY 100V H1
	VS4-0001-003		1	CONNECTOR, 3P, MALE	ACCESSORY 100V
	WS4-0219-000		2	PIN CONTACT, 18-22AWG	ACCESSORY 100V
J7050	SYS			COPIER	
	FH2-6481-000		1	HOUSING	
	VS1-5452-008		1	CONNECTOR, 8P, FEMALE	
	WS3-5018-000		4	SOCKET, CONTACT, AWG18-24	

FIGURE RB2 LIST OF ELECTRIC PARTS

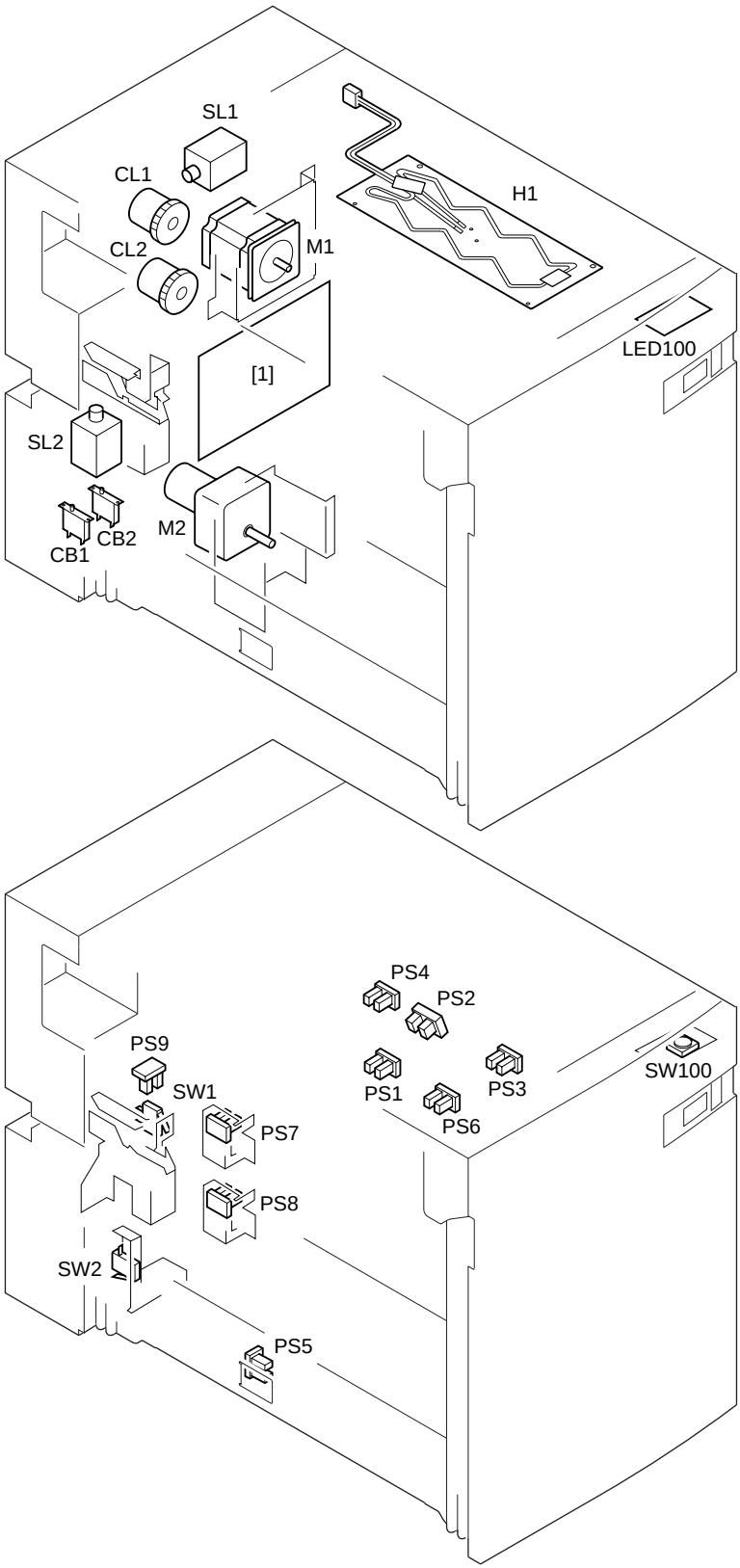

COPYRIGHT ©2002 CANON INC.

FIGURE & KEY NO.	PART NUMBER	RANK	Q'TY	DESCRIPTION	SERIAL NUMBER / REMARKS
R B2 -	NPN		RF	LIST OF ELECTRIC PARTS	
1	FG3-1711-000		1	DECK CONTROLLER PCB ASSEMBLY	
CB1	VD7-0502-001		1	BREAKER, CIRCUIT, 125VAC 3A	ACCESSORY 100V
CB2	VD7-0502-001		1	BREAKER, CIRCUIT, 125VAC 3A	ACCESSORY 100V
CL1	FH7-5826-000		1	CLUTCH, ELECTROMAGNETIC	
CL2	FH7-5826-000		1	CLUTCH, ELECTROMAGNETIC	
H1	FH7-4584-000		1	HEATER, CASSETTE	ACCESSORY 100V
LED100	FG5-9288-000		1	SWITCH PCB ASSEMBLY	
M1	FH6-1571-000		1	MOTOR, STEPPING, DC24V	
M2	FH7-1791-020		1	MOTOR, DC24V	
PS1	FH7-7462-000		1	PHOTO-INTERRUPTER	
PS2	FH7-7462-000		1	PHOTO-INTERRUPTER	
PS3	FH7-7462-000		1	PHOTO-INTERRUPTER	
PS4	FH7-7462-000		1	PHOTO-INTERRUPTER	
PS5	FH7-7462-000		1	PHOTO-INTERRUPTER	
PS6	FH7-7462-000		1	PHOTO-INTERRUPTER	
PS7	FH7-7312-000		1	PHOTO-INTERRUPTER	
PS8	FH7-7312-000		1	PHOTO-INTERRUPTER	
PS9	FH7-7462-000		1	PHOTO-INTERRUPTER	
SL1	FH7-5827-000		1	SOLENOID	
SL2	FH7-5828-000		1	SOLENOID, DC24V	
SW1	WC4-5153-000		1	MICRO SWITCH	
SW2	WC4-0153-000		1	MICROSWITCH	
SW100	FG5-9288-000		1	SWITCH PCB ASSEMBLY	

Inner 2way Tray-A1

Inner 2way Tray-A1

〔 F25-7801 XEF00001- 〕

CONTENTS

QA. ASSEMBLY LOCATION DIAGRAM

Q01. MOUNTING HARDWARE

Q30. DELIVERY ASSEMBLY

QB1. LIST OF CONNECTORS
QB2. LIST OF ELECTRIC PARTS

D5. NUMERICAL INDEX

COPYRIGHT ©2002 CANON INC.

FIGURE QA ASSEMBLY LOCATION DIAGRAM

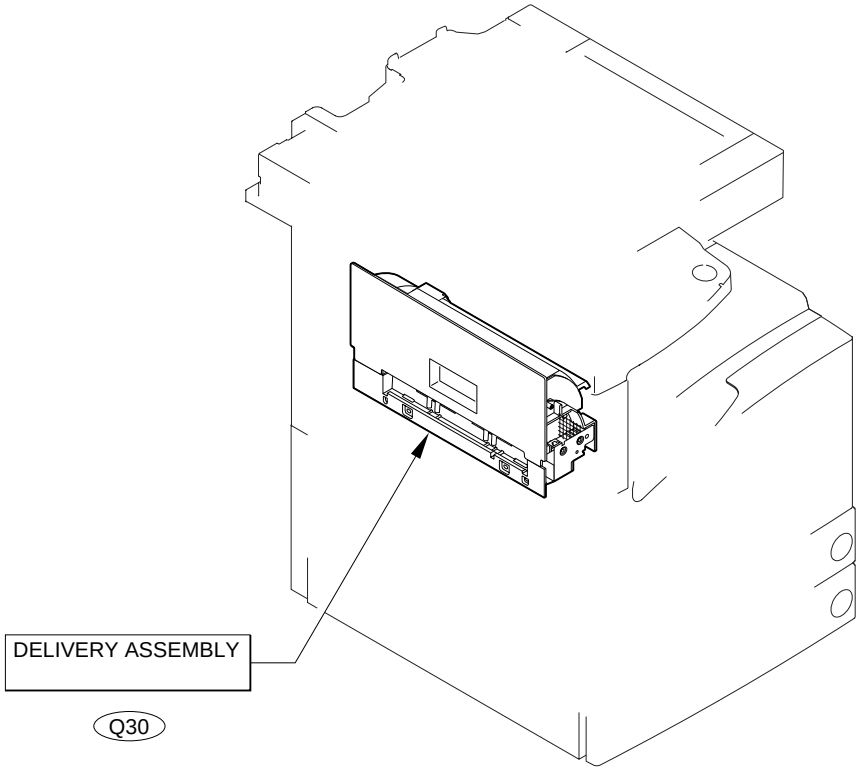

FIGURE Q01 MOUNTING HARDWARE

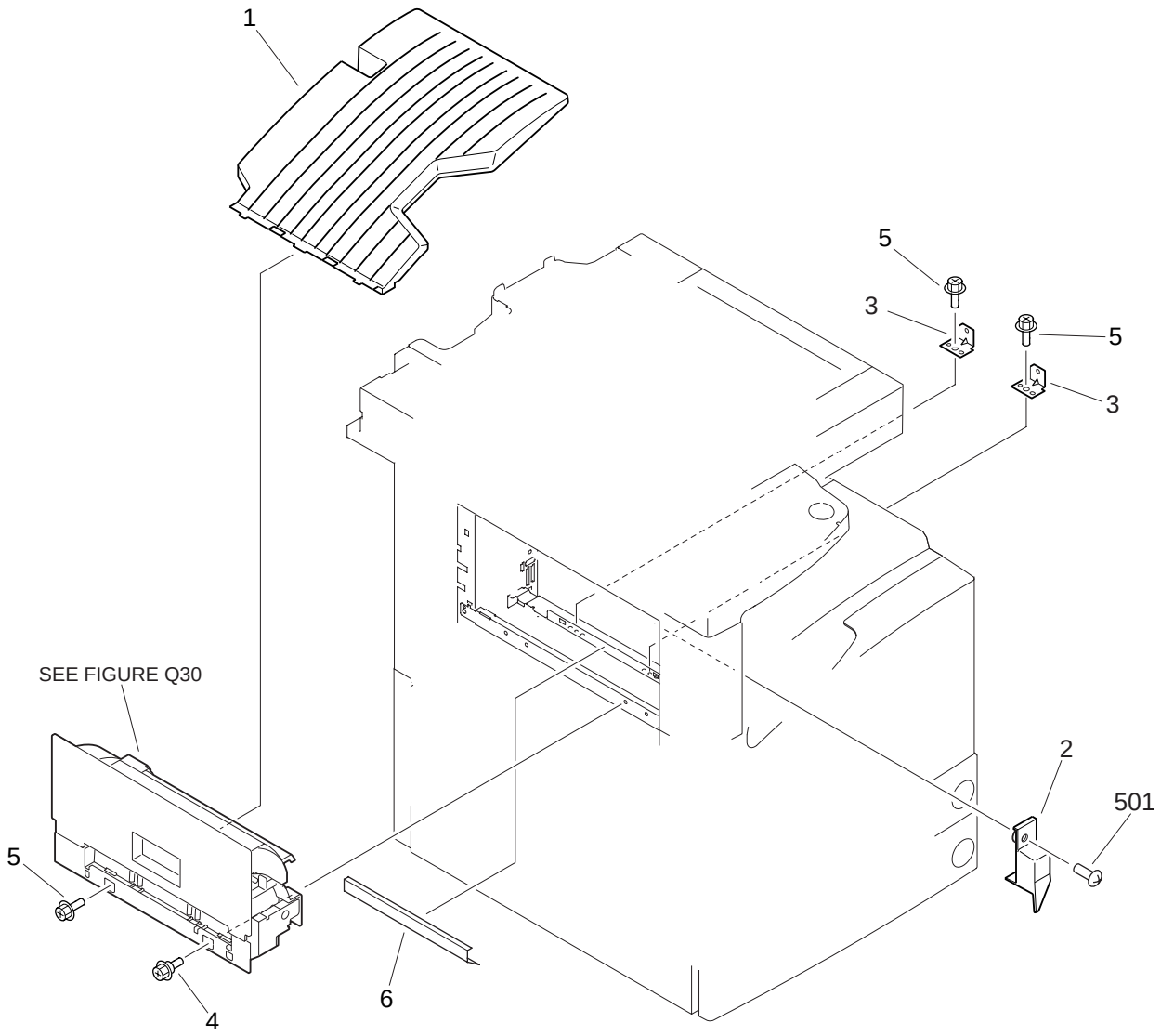

COPYRIGHT © 2002 CANON INC.

FIGURE & KEY NO.	PART NUMBER	RANK	Q'TY	DESCRIPTION	SERIAL NUMBER / REMARKS
Q01 -	NPN		RF	MOUNTING HARDWARE	
1	FB5-4886-000		1	TRAY, DELIVERY, 2	
2	FB5-4901-000		1	COVER, DELIVERY CONNECTOR	
3	FB5-4902-000		2	MOUNT, DELIVERY	
4	FS5-9661-000		1	SCREW,STEPPED,RS,M4	
5	XA9-0629-000		3	SCREW,RS,M4X8	
6	FB5-9811-000		1	SHEET, PROTECTIVE	
501	XB1-2401-406		1	SCREW,MACH.,TRUSS HEAD,M4X14	

FIGURE Q30 DELIVERY ASSEMBLY (1/2)

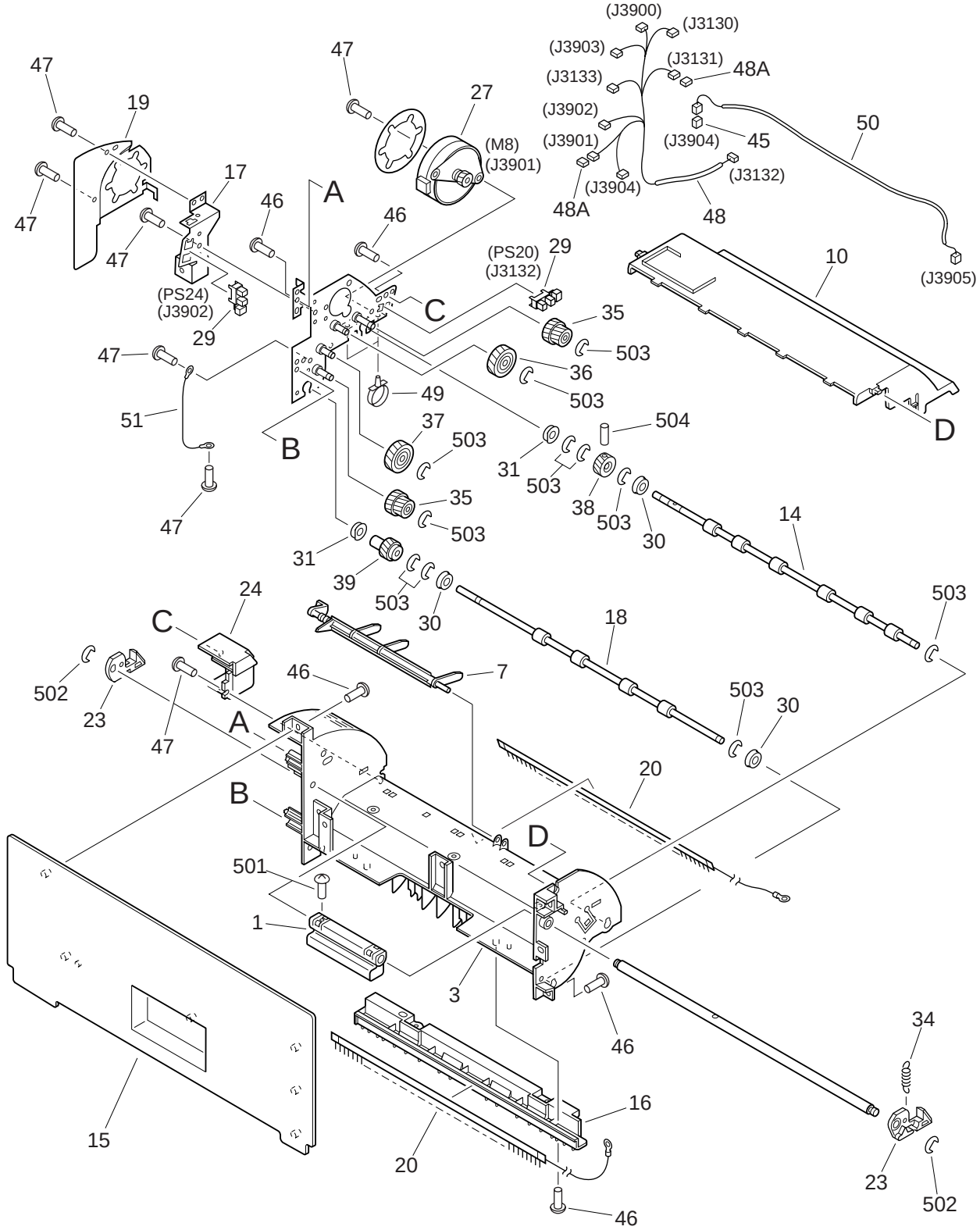

COPYRIGHT © 2002 CANON INC.

FIGURE Q30 DELIVERY ASSEMBLY (2/2)

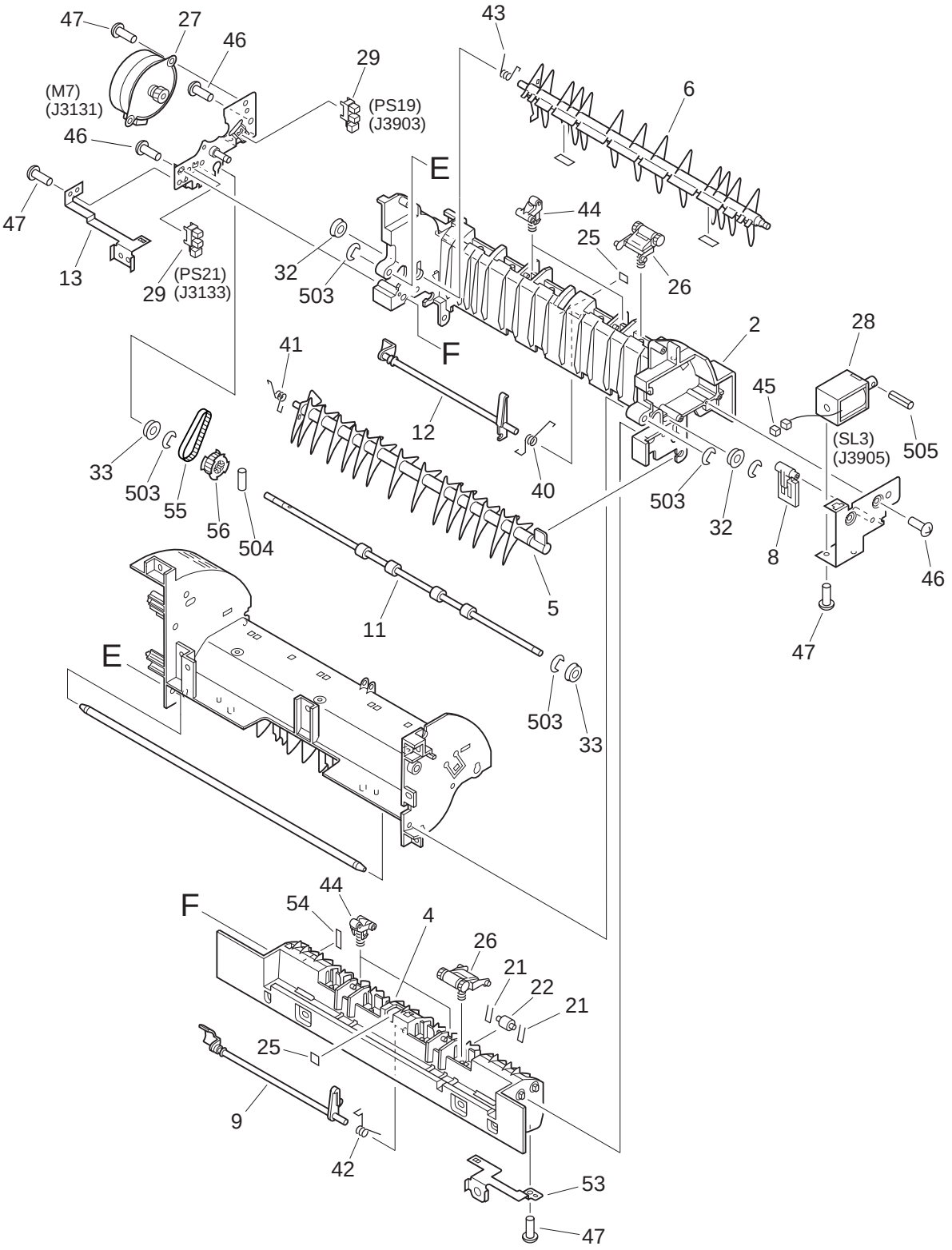

FIGURE & KEY NO.	PART NUMBER	RANK	Q'TY	DESCRIPTION	SERIAL NUMBER / REMARKS
Q30 -	FG6-5693-000		1	DELIVERY ASSEMBLY	
1	FB3-2812-000		1	HANDLE, RIGHT DOOR	
2	FB5-4861-000		1	FRAME, DELIVERY, FRONT	
3	FB5-4862-000		1	FRAME, DELIVERY, UPPER	
4	FB5-4863-000		1	FRAME, DELIVERY, LOWER	
5	FB5-4866-000		1	DEFLECTOR, LOWER	
6	FB5-4867-000		1	DEFLECTOR, UPPER	
7	FB5-4869-000		1	LEVER, LOAD UP SENSOR	
8	FB5-4872-000		1	LEVER, SL	
9	FB5-4873-000		1	FLAG, DELIVERY SENSOR, 3	
10	FB5-4881-000		1	COVER, DELIVERY, UPPER	
11	FB5-4885-000		1	ROLLER, VERTICAL PATH	
12	FB5-4888-000		1	FLAG, DELIVERY SENSOR, 2	
13	FB5-4891-000		1	GROUNDING PLATE, DELIVERY	
14	FB5-4900-000		1	ROLLER, DELIVERY, 2	
15	FB5-4903-000		1	COVER, DELIVERY	
16	FB5-4904-000		1	RIB, DELIVERY	
17	FB5-4905-000		1	PLATE, OPEN/CLOSE SENSOR	
18	FB5-4906-000		1	ROLLER, DELIVERY, 3	
19	FB5-4907-000		1	COVER, HARNESS	
20	FB5-4908-000		2	ELIMINATOR, STATIC CHARGE	
21	FB5-4910-000		4	SPRING, FEEDING ROLLER	
22	FB5-4920-000		4	ROLLER, FEED	
23	FB5-5141-000		2	HOOK, HANDLE	
24	FB5-5142-000		1	COVER, PI	
25	FB5-5150-000		3	RUBBER, NOISE PREVENTION	
26	FF6-0132-000		10	HOLDER, ROLLER	
27	FH6-1850-000		2	MOTOR, STEPPING	M7,8 J3131,3901
28	FH6-5019-000		1	SOLENOID, DC24V	SL3 J3905
29	FH7-7462-000		4	PHOTO-INTERRUPTER	PS19-21,24 J3903,3132,3133,3902

COPYRIGHT ©2002 CANON INC.

FIGURE & KEY NO.	PART NUMBER	RANK	Q'TY	DESCRIPTION	SERIAL NUMBER / REMARKS
Q30 - 30	FS1-1202-000		2	BUSHING	
31	FS1-1508-000		2	BUSHING	
32	FS5-1377-000		2	BUSHING	
33	FS5-1943-000		4	BUSHING	
34	FS6-2337-000		1	SPRING, TENSION	
35	FS7-0732-000		2	GEAR, 17T/27T	
36	FS7-0733-000		1	GEAR, 30T	
37	FS7-0734-000		1	GEAR, 30T	
38	FS7-0744-000		1	GEAR, 16T	
39	FS7-0748-000		1	GEAR, 16T	
40	FS7-2391-000		1	SPRING, TORSION	
41	FS7-2392-000		1	SPRING, TORSION	
42	FS7-2393-000		1	SPRING, TORSION	
43	FS7-2397-000		1	SPRING, TORSION	
44	RF5-1448-000		4	HOLDER, ROLLER, 2	
45	VS1-5057-002		2	CONNECTOR, SNAP TIGHT	J3904,3905
46	XA9-0606-000		16	SCREW, M4X10	
47	XA9-1116-000		13	SCREW,M3X5	
48	FG3-1878-000		1	CABLE, DELIVERY	J3130-3133,3900-3904
48A	VS1-5057-004		2	CONNECTOR, SNAP TIGHT	J3131,3901
49	WT2-5565-000		2	CLAMP, CABLE	
50	FG3-1879-000		1	CABLE, SOLENOID RELAY	J3904,3905
51	FG3-1880-000		1	CABLE, DELIVERY GROUNDING	
53	FB5-9574-000		1	PLATE, GROUNDING	
54	FB5-9808-000		1	RUBBER, NOISE PREVENTION	
55	XF2-1106-240		1	BELT, TIMING	
56	FS5-3835-000		1	PULLEY, 30T	
501	XB1-2400-809		1	SCREW,MACH.,TRUSS HEAD,M4X8	
502	XD2-1100-322		2	RING,E	
503	XD2-1100-502		12	RING,E	

FIGURE & KEY NO.	PART NUMBER	RANK	Q'TY	DESCRIPTION	SERIAL NUMBER / REMARKS
Q30 - 504	XD3-2200-122		2	PIN,DOWEL	
505	XD3-1300-102		1	PIN,SPRING	

COPYRIGHT ©2002 CANON INC.

FIGURE QB1 LIST OF CONNECTORS

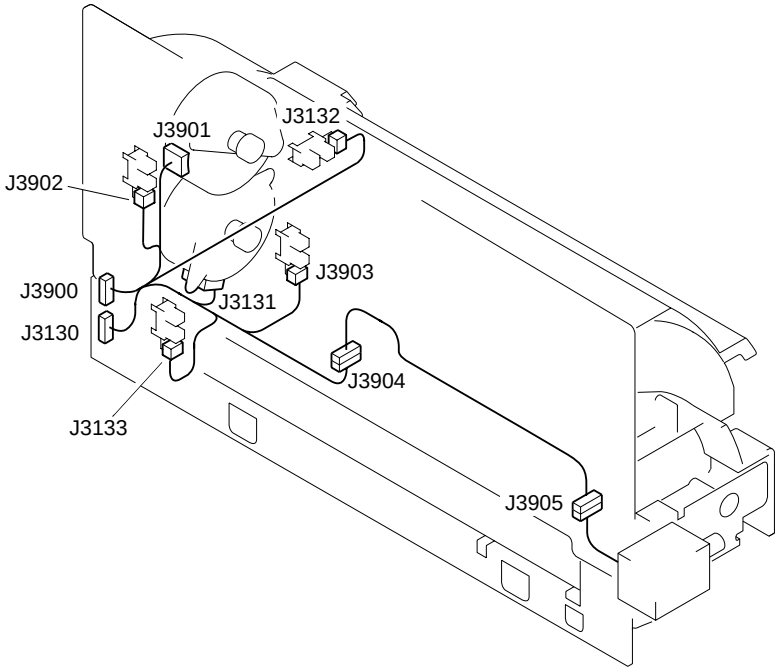

COPYRIGHT ©2002 CANON INC.

FIGURE & KEY NO.	PART NUMBER	RANK	Q'TY	DESCRIPTION	SERIAL NUMBER / REMARKS
Q B1 -	NPN		RF	LIST OF CONNECTORS	
J3130	SYS			COPIER	
	VS1-6321-012		1	CONNECTOR, 12P, MALE	
J3131	NPN			DELIVERY INLET MOTOR	M7
	VS1-6321-004		1	CONNECTOR, 4P, FEMALE	
	VS1-5057-004		1	CONNECTOR, SNAP TIGHT	
J3132	NPN			DELIVERY FULL SENSOR	PS20
	VS1-6321-003		1	CONNECTOR, 3P, FEMALE	
J3133	NPN			DELIVERY SENSOR 3	PS21
	VS1-6321-003		1	CONNECTOR, 3P, FEMALE	
J3900	SYS			COPIER	
	VS1-6321-013		1	CONNECTOR, 13P, FEMALE	
J3901	NPN			DELIVERY OUTLET MOTOR	M8
	VS1-6321-004		1	CONNECTOR, 4P, FEMALE	
	VS1-5057-004		1	CONNECTOR, SNAP TIGHT	
J3902	NPN			DELIVERY OPEN/CLOSE SENSOR	PS24
	VS1-6321-003		1	CONNECTOR, 3P, FEMALE	
J3903	NPN			DELIVERY SENSOR 2	PS19
	VS1-6321-003		1	CONNECTOR, 3P, FEMALE	
J3904	VS1-6321-002		2	CONNECTOR, 2P, FEMALE	
	VS1-5057-002		1	CONNECTOR, SNAP TIGHT	
J3905	NPN			DELIVERY SOLENOID	SL3
	VS1-6321-002		1	CONNECTOR, 2P, FEMALE	
	VS1-5057-002		1	CONNECTOR, SNAP TIGHT	

FIGURE QB2 LIST OF ELECTRIC PARTS

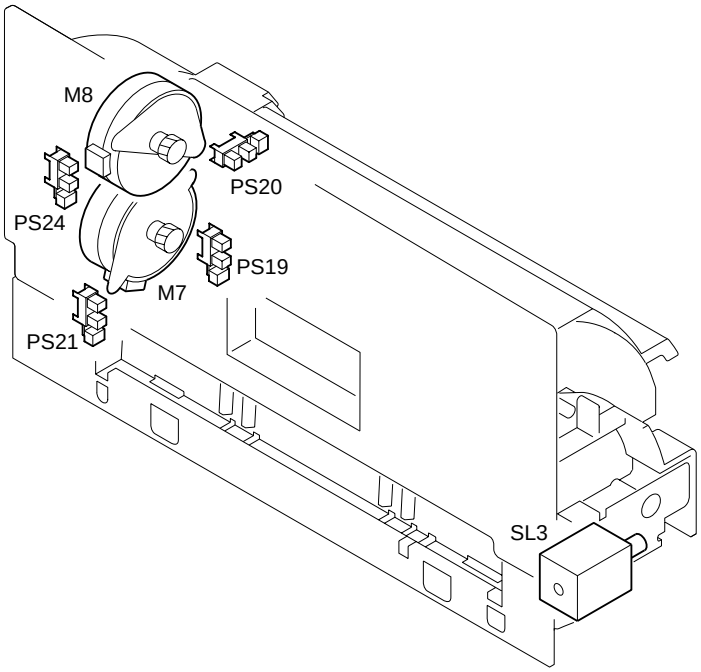

FIGURE & KEY NO.	PART NUMBER	RANK	Q'TY	DESCRIPTION	SERIAL NUMBER / REMARKS
Q B2 -	NPN		RF	LIST OF ELECTRIC PARTS	
M7	FH6-1850-000		1	MOTOR, STEPPING	
M8	FH6-1850-000		1	MOTOR, STEPPING	
PS19	FH7-7462-000		1	PHOTO-INTERRUPTER	
PS20	FH7-7462-000		1	PHOTO-INTERRUPTER	
PS21	FH7-7462-000		1	PHOTO-INTERRUPTER	
PS24	FH7-7462-000		1	PHOTO-INTERRUPTER	
SL3	FH6-5019-000		1	SOLENOID, DC24V	

COPYRIGHT ©2002 CANON INC.

Envelope Feeder Attachment - B1

〔100V F25 - 5411 XDU00001 -〕

Envelope Feeder Attachment - B1

〔120/220/240V F24 - 3653 XDV00001 -〕

CONTENTS

LA. ASSEMBLY LOCATION DIAGRAM

L10. ENVELOPE FEEDER ATTACHMENT

D6. NUMERICAL INDEX

COPYRIGHT ©2002 CANON INC.

FIGURE LA ASSEMBLY LOCATION DIAGRAM

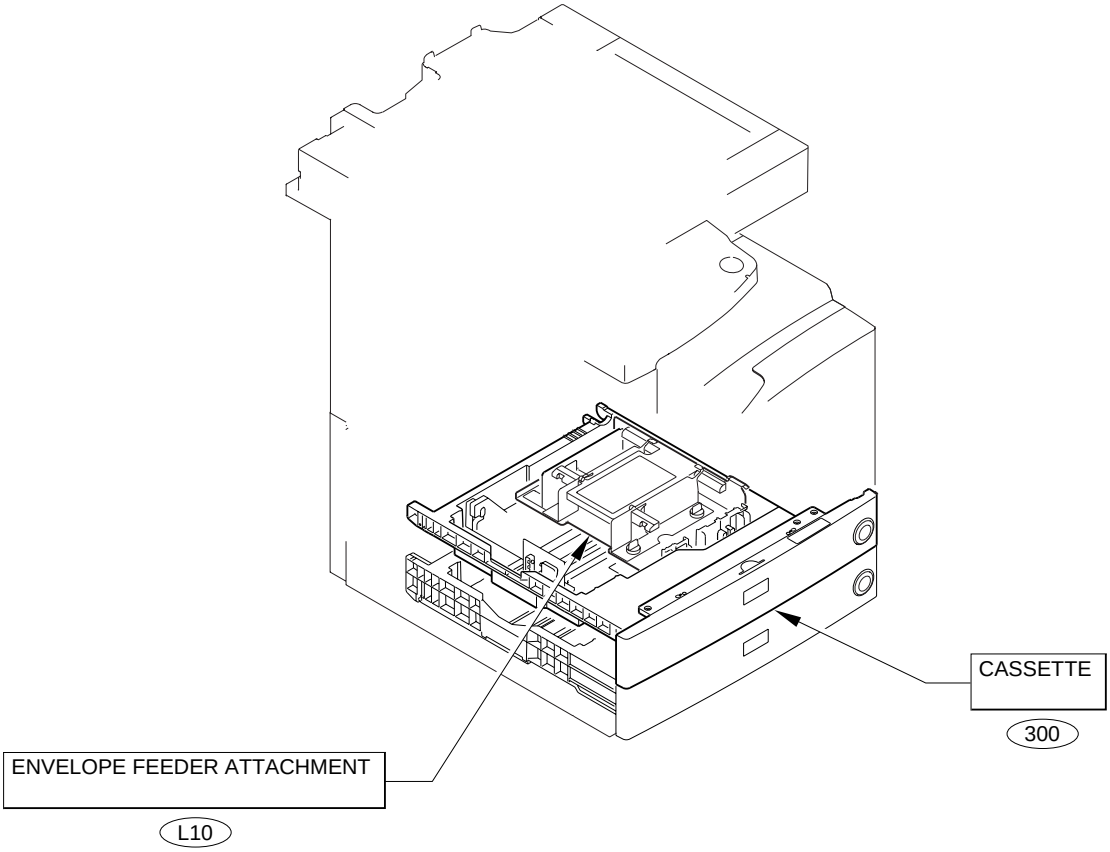

FIGURE L10 ENVELOPE FEEDER ATTACHMENT

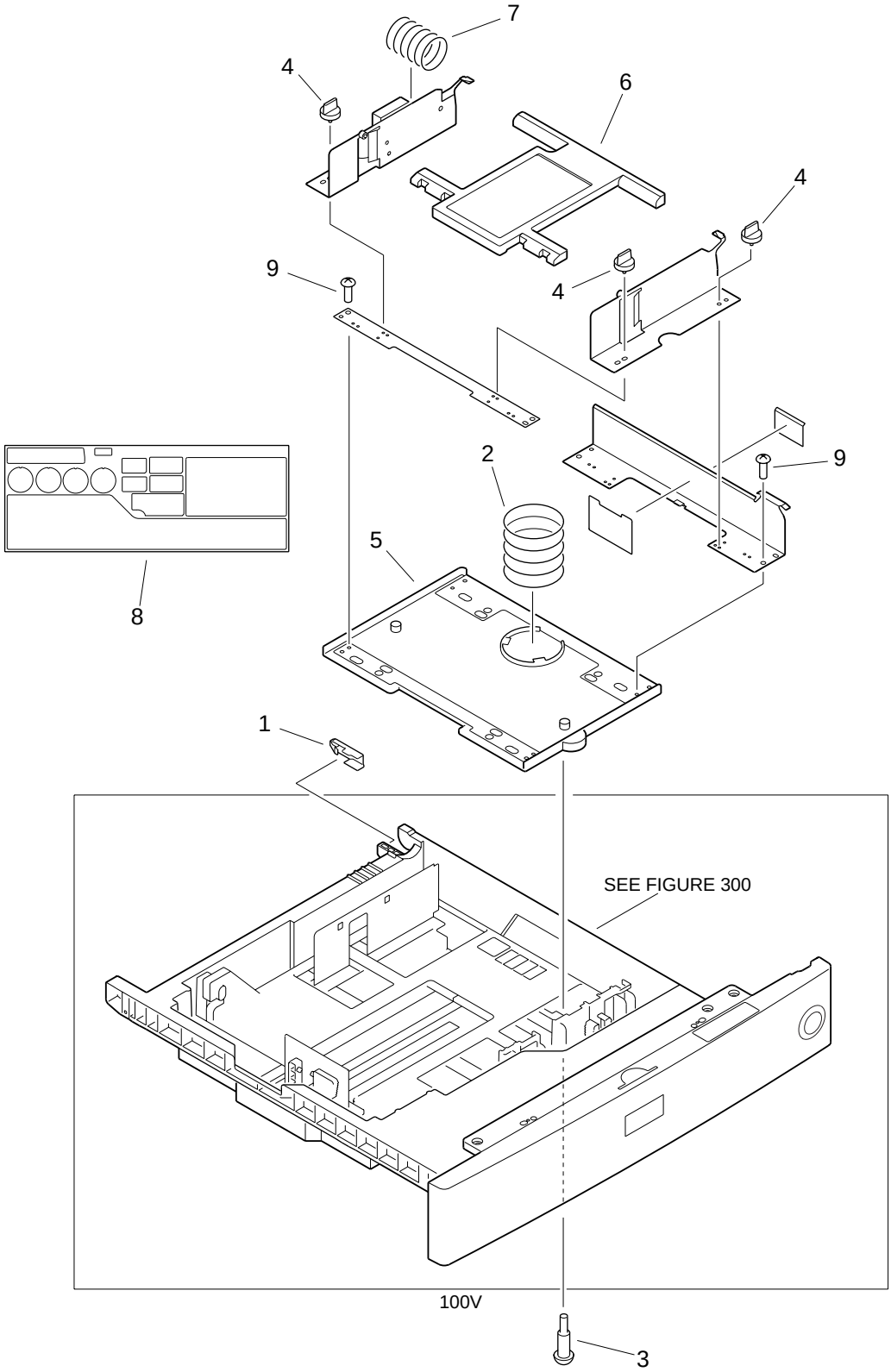

COPYRIGHT ©2002 CANON INC.

FIGURE & KEY NO.	PART NUMBER	RANK	Q'TY	DESCRIPTION	SERIAL NUMBER / REMARKS
L10 -	NPN		RF	ENVELOPE FEEDER ATTACHMENT	
1	FB3-2911-000		1	HOLDER, LIFTER STOP	
2	FB3-2916-000		1	SPRING, COMPRESSION	
	FB3-2903-000		1	SPRING, COMPRESSION, GREEN	
3	FS1-9200-000		2	SCREW, STEPPED, M3	
4	FB3-2908-000		4	SCREW, KNOB	
5	FB3-2912-000		1	BASE PLATE, ENVELOPE FEEDER, 1	
6	FB3-2915-000		1	PLATE, PAPER LIFTING	
7	FB3-2966-000		1	SPRING, COMPRESSION	
8	FB5-9575-000		1	LABEL, ENVELPOE	
9	XA9-0929-000		4	SCREW,TP,M4X7	

Token Ring Network Interface Adapter iN-TR2

〔 F61-8503 〕

CONTENTS

NA. ASSEMBLY LOCATION DIAGRAM

N90. TOKENRING BOARD PCB ASSEMBLY

D7. NUMERICAL INDEX

COPYRIGHT ©2002 CANON INC.

FIGURE NA ASSEMBLY LOCATION DIAGRAM

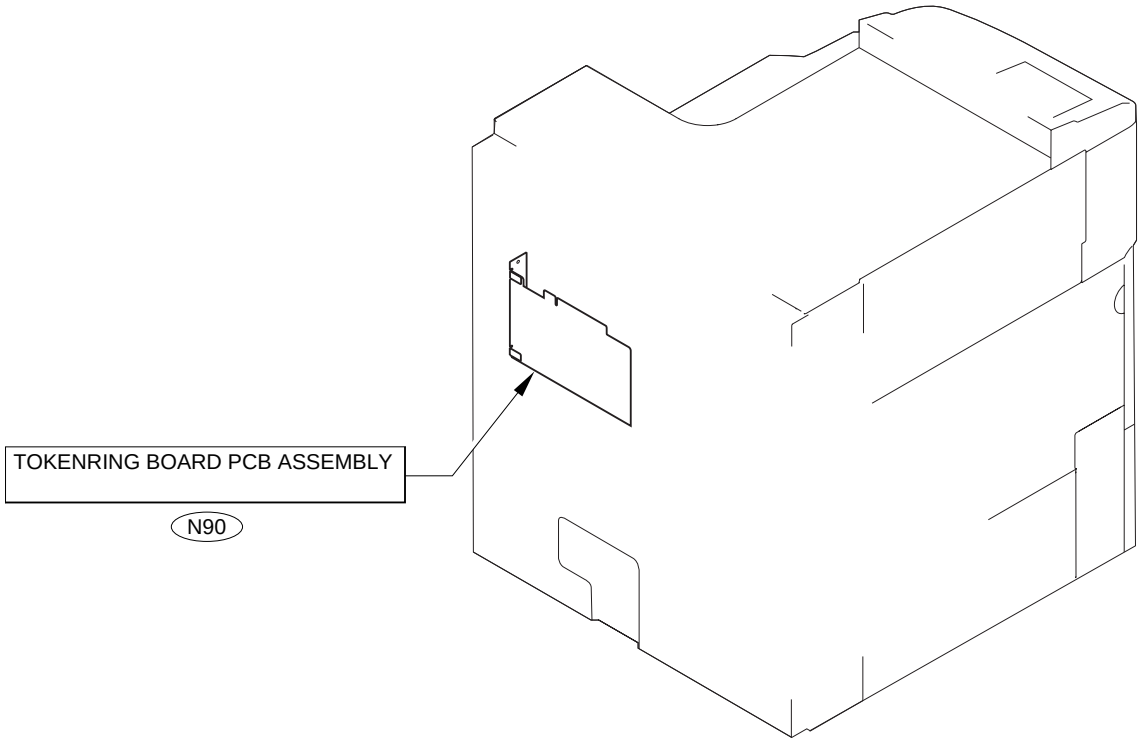

FIGURE N90 TOKENRING BOARD PCB ASSEMBLY

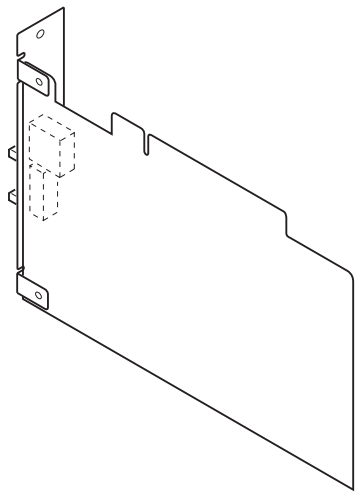

FIGURE & KEY NO.	PART NUMBER	RANK	Q'TY	DESCRIPTION	SERIAL NUMBER / REMARKS
N90 -	FG6-5796-000		1	TOKENRING BOARD PCB ASSEMBLY	
IC6	FF3-4343-000		1	IC, AT93C46-10SC-2.7, EEP-ROM	

COPYRIGHT ©2002 CANON INC.

Super G3 FAX Board-J1/J2

Super G3 FAX Board-J2

〔 100V　F61-8917 〕

Super G3 FAX Board-J1

〔 220V　F61-8941 〕
〔 240V　F61-8951 〕
〔 240V　F61-8961 〕
〔 220V　F61-8971 〕
〔 220V　F61-8981 〕
〔 220V　F61-8991 〕
〔 120V　F61-8936 〕

CONTENTS

GA. ASSEMBLY LOCATION DIAGRAM

G90. SUPER G3 FAX KIT
G91. SPEAKER ASSEMBLY

GB1. LIST OF CONNECTORS
GB2. LIST OF ELECTRIC PARTS

D8. NUMERICAL INDEX

COPYRIGHT ©2002 CANON INC.

FIGURE GA ASSEMBLY LOCATION DIAGRAM

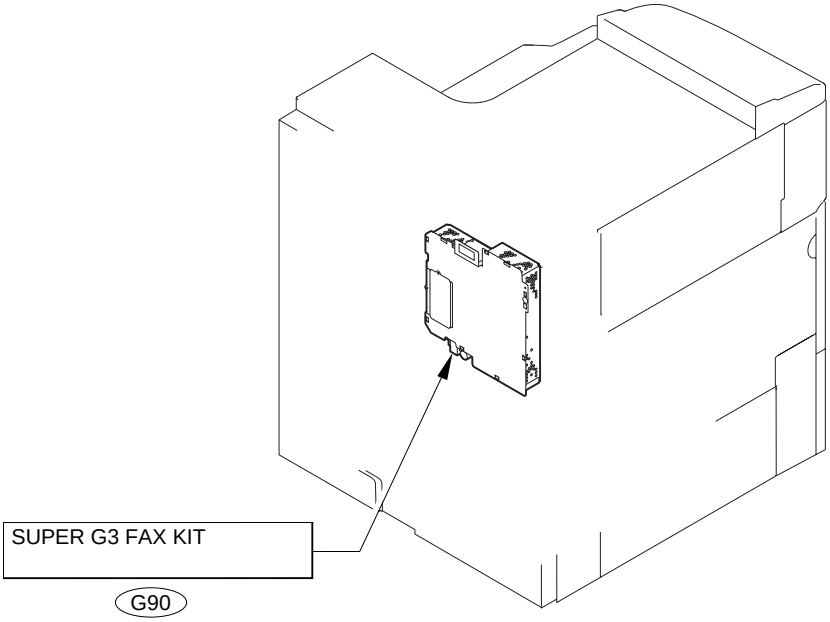

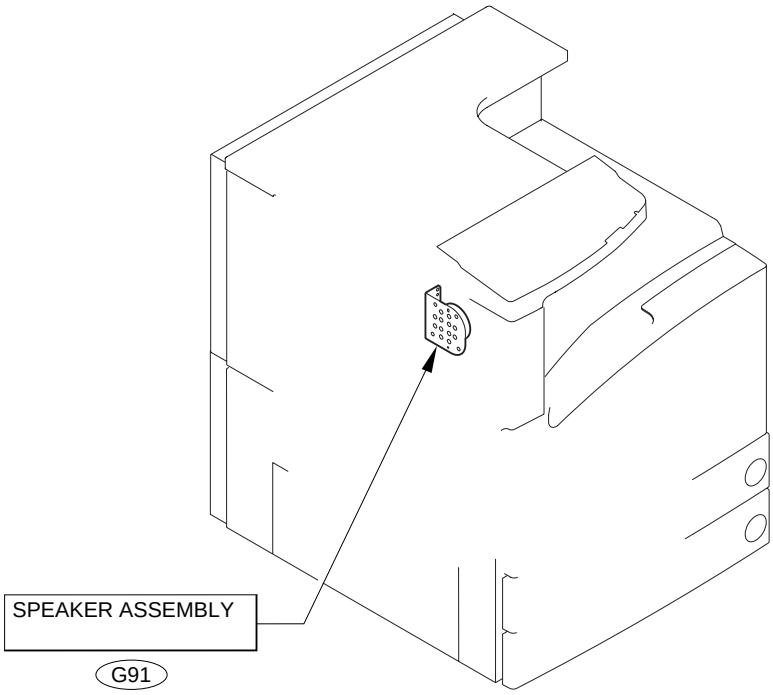

FIGURE G90 SUPER G3 FAX KIT

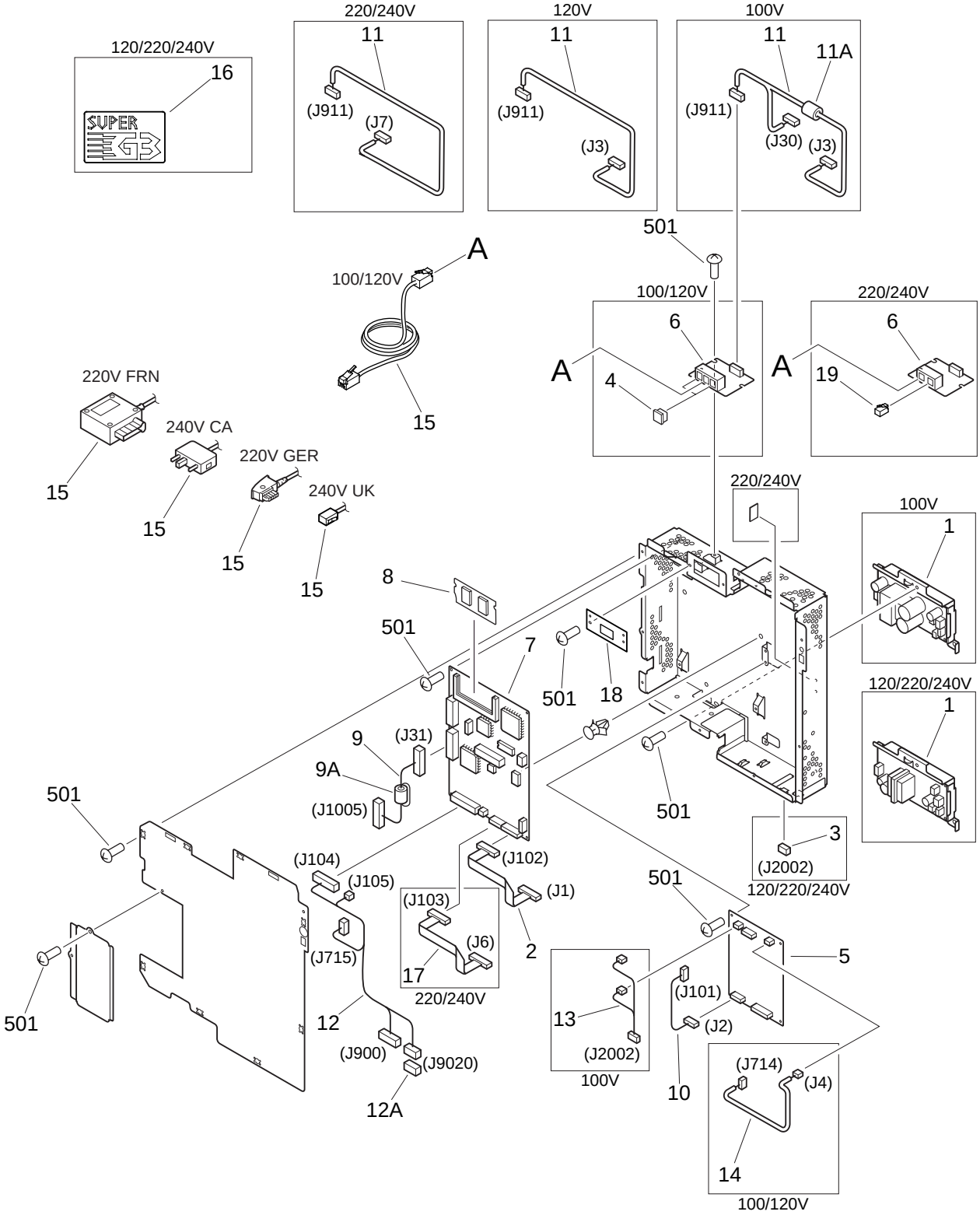

COPYRIGHT ©2002 CANON INC.

FIGURE & KEY NO.	PART NUMBER	RANK	Q'TY	DESCRIPTION	SERIAL NUMBER / REMARKS
G90 -	NPN		RF	SUPER G3 FAX KIT	
1	FG6-5798-000		1	PSEUDO CI PCB ASSEMBLY	100V
	FG6-5802-000		1	OFF-HOOK DETECT PCB ASSEMBLY	120/220/240V
2	FH2-6928-000		1	CABLE, FLAT, 1	J1,102
3	VS4-0002-002		1	CONNECTOR, 2P, FEMALE	120/220/240V J2002
4	WT8-5076-000		2	SPACER, MODULAR	100/120V
5	HG1-4365-000		1	NCU PCB ASSEMBLY	120V
	HG5-1866-000		1	NCU BOARD ASS'Y	100V
	HG5-2587-000		1	NCU PCB ASSEMBLY	220V AMS,GER,FRN 240V UK
	HG5-2598-000		1	NCU PCB ASSEMBLY	220V ASIA 240V CA
6	FG3-1582-000		1	G3 MODULAR PCB ASSEMBLY	100V
	FG3-1992-000		1	G3 MODULAR PCB ASSEMBLY	120V
	FG9-3920-000		1	G3 MODULAR PCB ASSEMBLY	220V AMS,GER,FRN 240V UK
	FG9-3921-000		1	G3 MODULAR PCB ASSEMBLY	220V ASIA 240V CA
7	FG3-1587-000		1	G3 FAX CONTROL PCB ASSEMBLY	
8	FG3-2497-000		1	DIMM ASS'Y	220/240V
	FG3-2673-000		1	DIMM ASS'Y	100/120V
9	FG3-1983-000		1	CABLE, FAX CONTROLLER	J31,1005
9A	WE8-5800-000		1	CORE, FERRITE	
10	FG3-1984-000		1	CABLE, G3 ANALOG, 1	J2,J101
11	FG3-1985-000		1	CABLE, G3 MODULAR	100V J3,30,911
	FG3-1991-000		1	CABLE, G3 MODULAR	120V J3,911
	FG3-2658-000		1	CABLE, G3 MODULAR	220/240V J7,911
11A	WE8-5780-000		1	CORE,FERRITE	100V
12	FG3-1986-000		1	CABLE, FAX POWER SUPPLY	J104,105,715 J900,9020
12A	VS1-5057-002		1	CONNECTOR, SNAP TIGHT	J9020
13	FG3-1988-000		1	CABLE, GROUNDING	100V J2002
14	FG3-1989-000		1	CABLE, G3 HV	100/120V J4,714
15	HH2-1914-000		1	MODULAR CABLE	240V UK
	HH2-2074-000		1	MODULAR CABLE	220V GER

FIGURE & KEY NO.	PART NUMBER	RANK	Q'TY	DESCRIPTION	SERIAL NUMBER / REMARKS
G90 - 15	HH2-2219-000		1	MODULAR CABLE	220V FRN
	HH2-2478-000		1	MODULAR CORD	240V CA
	HH2-2830-000		1	CORD, MODULAR	100/120V
16	FB4-6724-000		1	LABEL, G3	220/240V
	FB4-6728-000		1	LABEL, "SUPER G3"	120V
17	FH2-6962-000		1	CABLE, FLAT, 2	220/240V J6,103
18	FB5-5120-000		1	PLATE, BLANKING, G3	100V
	FB6-2875-000		1	COVER, MODULAR	120/220/240V
19	WS1-5370-000		1	SPACER, MODULAR	220/240V
501	XB6-7300-607		21	SCREW,TP,M3X6	

COPYRIGHT ©2002 CANON INC.

FIGURE G91 SPEAKER ASSEMBLY

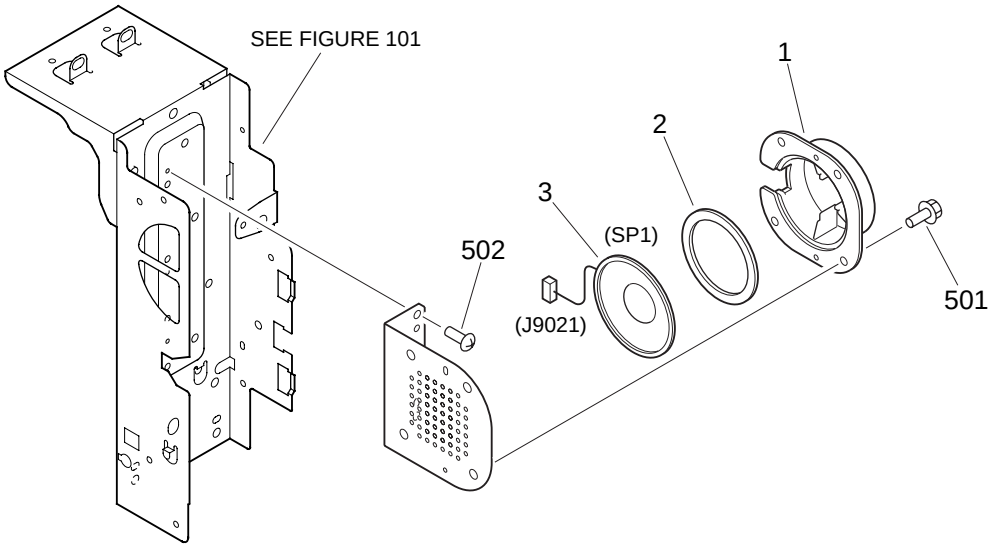

NOTE : This assembly does not include the part shown with key No. 502.

FIGURE & KEY NO.	PART NUMBER	RANK	Q'TY	DESCRIPTION	SERIAL NUMBER / REMARKS
G91 -	FG6-5799-000		1	SPEAKER ASSEMBLY	
1	FB5-5126-000		1	HOLDER, SPEAKER	
2	FB5-5130-000		1	DAMPER, RUBBER	
3	FH5-3218-000		1	SPEAKER	SP1 J9021
501	XB3-6400-800		4	SCREW,RS,M4X8	
502	XB6-7300-607		2	SCREW,TP,M3X6	SEE NOTE

COPYRIGHT © 2002 CANON INC.

FIGURE GB1 LIST OF CONNECTORS

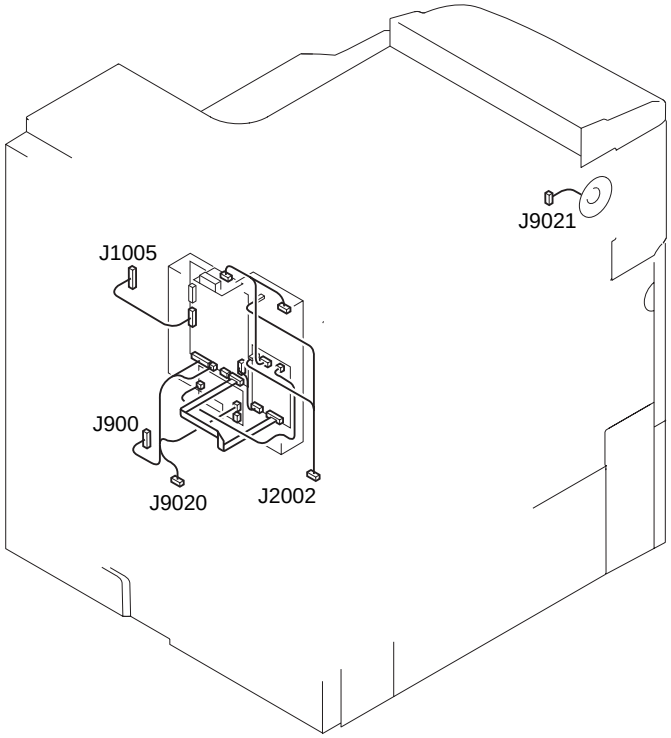

COPYRIGHT ©2002 CANON INC.

FIGURE & KEY NO.	PART NUMBER	RANK	Q'TY	DESCRIPTION	SERIAL NUMBER / REMARKS
G B1 -	NPN		RF	LIST OF CONNECTORS	
J1	PCB			NCU BOARD 1	
	FH2-6928-000		1	CABLE, FLAT, 1	
J2	PCB			NCU BOARD 1	
	VS1-5452-006		1	CONNECTOR, 6P, FEMALE	
J3	PCB			NCU BOARD 1	100/120V
	VS3-5080-005		1	CONNECTOR, 5P, FEMALE	120V
	VS3-5080-007		1	CONNECTOR, 7P, FEMALE	100V
	WT1-5155-000		4	TERMINAL	100V
	WT1-5155-000		2	TERMINAL	120V
J4	PCB			NCU BOARD 1	100/120V
	VS3-5080-002		1	CONNECTOR, 2P, MALE	100/120V
	WT1-5155-000		2	TERMINAL	100/120V
J6	PCB			NCU BOARD 1	220/240V
	FH2-6962-000		1	CABLE, FLAT, 2	220/240V
J7	PCB			NCU BOARD 1	220/240V
	VS3-0143-006		1	CONNECTOR, 6P, FEMALE	220/240V
	WS3-5251-000		6	SOCKET CONTACT	220/240V
J30	PCB			NCU BOARD 2	ACCESSORY
	VS3-5080-007		1	CONNECTOR, 7P, FEMALE	100V
	WT1-5155-000		2	TERMINAL	100V
J31	PCB			G3 FAX BOARD	
	VS1-6313-020		1	CONNECTOR, 20P, FEMALE	
	VS1-6314-020		1	CONNECTOR, 20P, FEMALE	
	VT2-5161-040		1	HOLDER, CONNECTOR, 40P	
J101	PCB			G3 FAX BOARD	
	VS1-5452-006		1	CONNECTOR, 6P, FEMALE	
J102	PCB			G3 FAX BOARD	
	FH2-6928-000		1	CABLE, FLAT, 1	
J103	PCB			G3 FAX BOARD	220/240V

FIGURE & KEY NO.	PART NUMBER	RANK	Q'TY	DESCRIPTION	SERIAL NUMBER / REMARKS
G B1 - J103	FH2-6962-000		1	CABLE, FLAT, 2	220/240V
J104	PCB			G3 FAX BOARD	
	VS1-6302-014		1	CONNECTOR, 14P, MALE	
	WS3-5569-000		12	PIN, CONTACT	
J105	PCB			G3 FAX BOARD	
	VS3-0143-002		1	CONNECTOR, 2P, FEMALE	
	WS3-5251-000		2	SOCKET CONTACT	
J106	PCB			G3 FAX BOARD	
	PCB			MULTIPORT MODEM	ACCESSORY
J712	SYS			COPIER	
	PCB			PSEUDO CI	100V
	PCB			OFF-HOOK DETECT	120/220/240V
J713	SYS			COPIER	
	PCB			PSEUDO CI	100V
	PCB			OFF-HOOK DETECT	120/220/240V
J714	PCB			OFF-HOOK DETECT	120V
	PCB			PSEUDO CI	100V
	VS3-5083-003		1	CONNECTOR, 3P, FEMALE	100/120V
	WS3-5160-000		2	SOCKET CONTACT, 18-24AWG	100/120V
J715	PCB			PSEUDO CI	100V
	PCB			OFF-HOOK DETECT	120/220/240V
	VS1-6302-002		1	CONNECTOR, 2P, MALE	
	WS3-5569-000		2	PIN, CONTACT	
J900	SYS			COPIER	
	VS1-6702-010		1	CONNECTOR, 10P, FEMALE	
	WS3-5720-000		10	SOCKET CONTACT, 22-28AWG	
J911	PCB			G3 MODULAR BOARD	
	VS3-0143-011		1	CONNECTOR, 11P, FEMALE	220/240V
	VS3-5080-007		1	CONNECTOR, 7P, FEMALE	100/120V
	WS3-5251-000		11	SOCKET CONTACT	220/240V

COPYRIGHT ©2002 CANON INC.

FIGURE & KEY NO.	PART NUMBER	RANK	Q'TY	DESCRIPTION	SERIAL NUMBER / REMARKS
G B1 - J911	WT1-5155-000		6	TERMINAL	100V
	WT1-5155-000		2	TERMINAL	120V
J1005	SYS			COPIER	
	VS1-6313-020		1	CONNECTOR, 20P, FEMALE	
	VS1-6314-020		1	CONNECTOR, 20P, FEMALE	
	VT2-5161-040		1	HOLDER, CONNECTOR, 40P	
J2002	SYS			COPIER	
	VS4-0002-002		1	CONNECTOR, 2P, FEMALE	
	WS4-0217-000		2	SOCKET CONTACT, 22-18AWG	
J9020	SYS			COPIER	
	VS1-0842-002		1	CONNECTOR, 2P, FEMALE	
	VS1-5057-002		1	CONNECTOR, SNAP TIGHT	
J9021	SYS			COPIER	
	NPN			SPEAKER	SP1

FIGURE GB2 LIST OF ELECTRIC PARTS

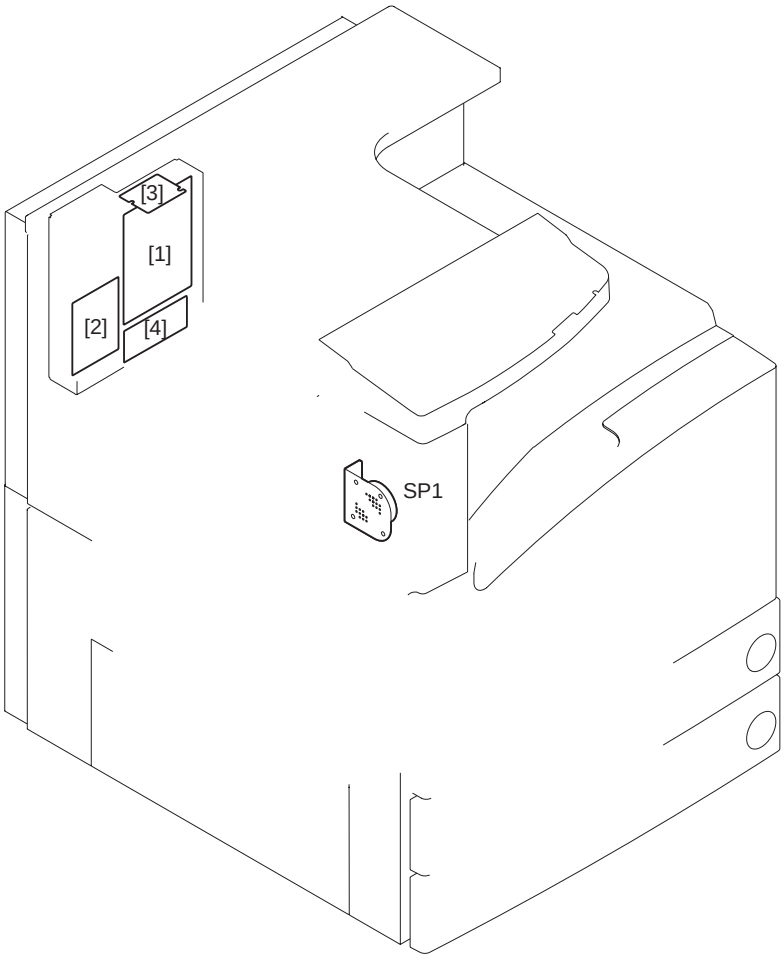

COPYRIGHT ©2002 CANON INC.

FIGURE & KEY NO.	PART NUMBER	RANK	Q'TY	DESCRIPTION	SERIAL NUMBER / REMARKS
G B2 -	NPN		RF	LIST OF ELECTRIC PARTS	
1	FG3-1587-000		1	G3 FAX CONTROL PCB ASSEMBLY	
2	HG1-4365-000		1	NCU PCB ASSEMBLY	120V
	HG5-1866-000		1	NCU BOARD ASS'Y	100V
	HG5-2587-000		1	NCU PCB ASSEMBLY	220V AMS,GER,FRN 240V UK
	HG5-2598-000		1	NCU PCB ASSEMBLY	220V ASIA 240V CA
3	FG3-1582-000		1	G3 MODULAR PCB ASSEMBLY	100V
	FG3-1992-000		1	G3 MODULAR PCB ASSEMBLY	120V
	FG9-3920-000		1	G3 MODULAR PCB ASSEMBLY	220V AMS,GER,FRN 240V UK
	FG9-3921-000		1	G3 MODULAR PCB ASSEMBLY	220V ASIA 240V CA
4	FG6-5798-000		1	PSEUDO CI PCB ASSEMBLY	100V
	FG6-5802-000		1	OFF-HOOK DETECT PCB ASSEMBLY	120/220/240V
SP1	FH5-3218-000		1	SPEAKER	

CONTROL FONT ROM CFR-M1

〔 F61-8504 〕

CONTENTS

EA. ASSEMBLY LOCATION DIAGRAM

E90. CONTROL FONT ROM

D9. NUMERICAL INDEX

COPYRIGHT ©2002 CANON INC.

FIGURE EA ASSEMBLY LOCATION DIAGRAM

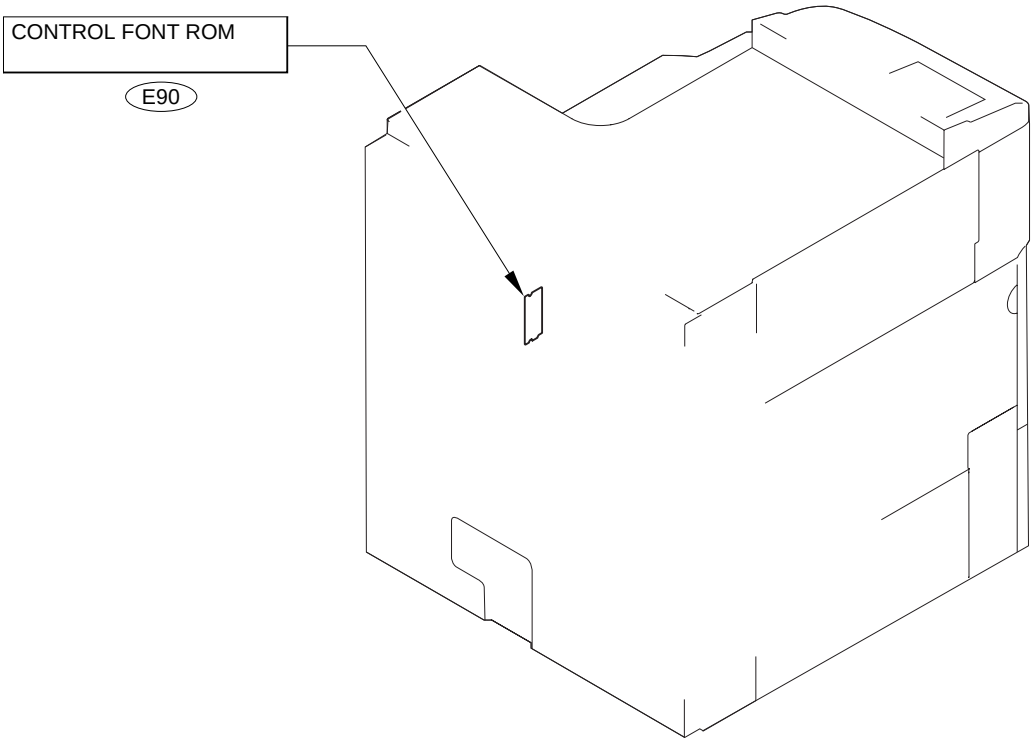

FIGURE E90 CONTROL FONT ROM

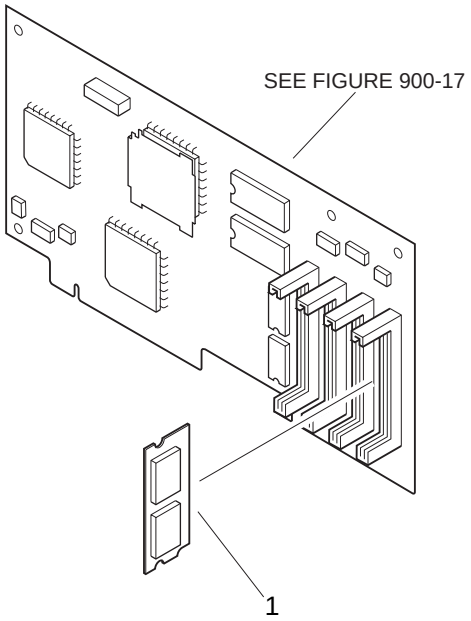

FIGURE & KEY NO.	PART NUMBER	RANK	Q'TY	DESCRIPTION	SERIAL NUMBER / REMARKS
E90 -	NPN		RF	CONTROL FONT ROM	
1	FG3-1934-000		1	DIMM ASS'Y	

COPYRIGHT ©2002 CANON INC.

D1 NUMERICAL INDEX (Image Reader-B1)

PART NUMBER	FIGURE & KEY NO.
FB1-7109-000	210 - 44
FB3-2398-020	210 - 45
FB3-2411-000	420 - 1
	430 - 1
FB4-5402-000	210 - 1
FB4-5434-000	420 - 2
FB4-5435-000	430 - 3
FB5-3046-000	210 - 46
FB5-3052-000	210 - 17A
FB5-3058-000	210 - 2
FB5-3059-000	210 - 3
FB5-3085-000	210 - 29
FB5-3086-000	210 - 30
FB5-3087-000	210 - 31
FB5-3090-000	210 - 34
FB5-3498-000	210 - 26
FB5-3635-000	210 - 35
FB5-3636-000	210 - 36
FB5-4535-000	210 - 17B
FB5-4553-000	210 - 17B
FB5-4554-000	210 - 17B
FB5-4555-000	210 - 17B
FB5-4557-000	210 - 17A
FB5-4558-000	210 - 17A
FB5-4559-000	210 - 17A
FB5-4586-000	210 - 11A
FB5-5206-000	210 - 4
FB5-5211-000	420 - 3
FB5-5212-000	420 - 4
FB5-5213-000	420 - 5
FB5-5221-000	210 - 7
FB5-5226-000	430 - 4
FB5-5228-000	210 - 47
FB5-5239-000	210 - 6
FB5-5458-000	210 - 66
FB5-5462-000	210 - 67
FB5-5467-000	210 - 68
FB5-5544-000	210 - 48
FB5-5551-000	210 - 42
FB5-5555-000	210 - 58
FB5-5567-000	210 - 12A
FB5-5593-000	210 - 59
FB6-0334-000	001 - 1
FB6-0340-000	210 - 60
FB6-0342-000	430 - 2
FB6-0344-000	210 - 61
FF3-4267-000	210 - 54
FF3-4269-000	210 - 28A
FF3-4273-000	210 - 41
FF3-4279-000	210 - 9
FF3-4280-000	210 - 37
FF3-4284-000	210 - 10
FF5-9816-000	210 - 11
FF5-9820-000	210 - 49
FF5-9821-000	210 - 50
FF6-0328-000	210 - 14
FF6-0329-000	210 - 15
FF6-0331-000	210 - 62
FF6-0333-000	420 - 6
FF6-0334-000	430 - 5
FF6-0340-000	210 - 16
FF6-0342-000	210 - 12
FF6-0346-000	210 - 23
FF6-0384-000	210 - 13
FF6-1484-000	001 - 3
FF6-2006-000	001 - 2
FF9-1858-000	210 - 17
FF9-1859-000	210 - 17
FF9-1860-000	210 - 17
FF9-1861-000	210 - 17
FG3-1679-000	210 - 40
FG3-1680-000	210 - 70
FG3-1681-000	931 -
	B2 - 17
FG3-1682-000	210 - 71
	B2 - 21
FG3-1683-000	210 - 55
FG3-1736-040	931 - 1
FG3-2397-000	210 - 63
FG3-2398-000	210 - 69A
FG3-2399-000	210 - 69B
FG6-4971-000	210 - 53
FG6-4985-000	210 - 57
FG6-5956-000	210 - 72
FG6-6018-000	420 -

PART NUMBER	FIGURE & KEY NO.
FG6-6019-000	430 -
FG6-6028-000	420 - 8
	B2 - LAMP1
FG6-7978-000	210 - 69
	B2 - 20
FG6-7982-000	210 - 28
	B2 - 18
FH2-5821-000	B1 - J2
	B1 - J9200
FH2-5825-000	B1 - J9200
FH2-6480-000	B1 - J4100
FH2-6552-000	210 - 8
FH2-6756-000	210 - 5
	B1 - J5502
	B1 - J9202
FH2-6855-000	B1 - J9200
FH2-6856-000	B1 - J2
	B1 - J9200
FH3-0932-000	931 - L924
FH3-7211-020	210 - 18
	B2 - 19
FH4-5855-000	931 - IC920
FH4-5987-000	931 - IC405
FH4-6102-000	931 - IC407
FH4-6123-000	931 - IC404
FH4-6202-000	931 - IC424
FH6-1856-000	210 - 33
	B2 - M400
FH7-4665-000	210 - 27
	B2 - H4
FH7-4666-000	210 - 19
	B2 - H5
FH7-7550-000	210 - 20
	B2 - SD1
FH7-7557-000	210 - 38
	210 - 51
	B2 - PS400
	B2 - PS401
FS2-9540-000	002 - 1
FS2-9542-000	002 - 2
FS5-3826-000	210 - 32
FS5-9227-000	210 - 39
FS5-9642-000	210 - 52
FS5-9665-000	001 - 5
FS6-2341-000	420 - 7
FS6-2913-000	210 - 21
FS6-8478-000	210 - 64
FS7-2399-000	210 - 22
PCB	B1 - J400
	B1 - J401
	B1 - J402
	B1 - J403
	B1 - J404
	B1 - J405
	B1 - J406
	B1 - J407
	B1 - J408
	B1 - J409
	B1 - J411
	B1 - J600
	B1 - J601
	B1 - J602
	B1 - J603
	B1 - J2000
	B1 - J4021
	B1 - J4061
	B1 - J5501
	B1 - J5502
	B1 - J5503
	B1 - J5602
RH2-5191-000	210 - 56
VD7-1625-001	931 - FU921
VS1-5057-003	210 - 37A
	210 - 43
	B1 - J4051
	B1 - J4060
VS1-5452-007	B1 - J404
	B1 - J4100
VS1-5729-002	B1 - J4101
VS1-5729-004	B1 - J4030
VS1-6302-003	B1 - J411
	B1 - J5503
VS1-6302-006	B1 - J401
	B1 - J4010
VS1-6313-004	B1 - J601

PART NUMBER	FIGURE & KEY NO.
VS1-6313-011	B1 - J600
VS1-6314-003	B1 - J406
VS1-6314-004	B1 - J402
	B1 - J4021
VS1-6314-005	B1 - J408
	B1 - J4020
VS1-6314-006	B1 - J405
VS1-6314-010	B1 - J407
VS1-6318-005	210 - 41A
	B1 - J4020
VS1-6320-003	B1 - J4051
VS1-6321-003	B1 - J4052
	B1 - J4053
	B1 - J4060
VS1-6407-080	B1 - J409
	B1 - J5501
VS3-5083-002	B1 - J400
	B1 - J603
	B1 - J4101
VS3-5083-003	B1 - J5602
VS3-5083-004	B1 - J403
	B1 - J602
	B1 - J4030
WE8-5858-000	210 - 40A
	210 - 70A
WE8-5989-000	210 - 69C
WS3-5160-000	B1 - J400
	B1 - J403
	B1 - J602
	B1 - J603
	B1 - J4030
	B1 - J4101
	B1 - J5602
WS3-5264-000	B1 - J2
	B1 - J9200
WS3-5301-000	B1 - J4030
	B1 - J4101
WS3-5569-000	B1 - J401
	B1 - J411
	B1 - J4010
	B1 - J5503
WS3-5596-000	B1 - J4100
WT2-5565-000	210 - 9A
	210 - 53A
XA9-0425-000	430 - 6
XA9-0642-000	210 - 65
XA9-0721-000	210 - 24
XA9-1031-000	001 - 4
XB1-2300-407	210 - 501
XB1-2300-609	210 - 509
	210 - 511
	210 - 518
XB1-2401-007	001 - 501
XB2-7400-607	210 - 519
XB2-7400-609	210 - 512
XB2-8300-809	420 - 501
XB3-6400-800	210 - 502
	210 - 510
	210 - 513
	210 - 514
	210 - 517
XB3-6401-205	210 - 515
XB6-2400-508	210 - 507
XB6-7300-409	210 - 503
	420 - 502
XB6-7300-607	210 - 521
XB6-7501-007	210 - 520
XB7-1030-069	430 - 501
XB7-1030-169	420 - 503
XD2-1100-502	430 - 502
XD2-1100-642	210 - 504
	210 - 505
	210 - 508
	210 - 516
XD3-1250-142	210 - 506
XG9-0250-000	210 - 25

D2 NUMERICAL INDEX (iR2200i/2800i/3300i)

PART NUMBER	FIGURE & KEY NO.
FA1-0056-000	103 - 1
	330 - 25
FA4-1159-000	120 - 1
FA6-5618-000	500 - 8
FA7-3568-000	900 - 14
FA7-3569-000	900 - 14
FA9-2112-000	250 - 2
	260 - 1
FA9-3313-000	300 - 23
FA9-3314-000	300 - 24
FB1-5816-000	640 - 1
FB1-6710-000	640 - 2
FB1-6718-000	640 - 3
FB1-6719-000	640 - 4
FB1-6841-000	351 - 1
FB1-7099-020	280 - 1
FB1-7157-000	100 - 26
FB1-7190-000	280 - 2
FB1-7214-000	103 - 2
FB1-7218-000	640 - 5
FB1-7219-000	640 - 6
FB1-7737-000	100 - 32
FB1-7738-000	100 - 33
FB1-8130-000	640 - 7
FB1-8439-000	120 - 2
FB1-8581-000	120 - 3
FB1-8584-000	120 - 22A
FB1-8619-000	315 - 1
FB1-8621-000	315 - 2
FB1-8625-000	315 - 3
FB2-3900-030	104 - 20
FB3-2206-000	104 - 1
FB3-2214-000	103 - 3
FB3-2224-000	100 - 7
FB3-2381-000	100 - 46
FB3-2576-000	250 - 3
FB3-2596-000	107 - 14
FB3-2648-000	320 - 1
FB3-2649-000	320 - 2
FB3-2658-000	320 - 3
FB3-2672-000	640 - 8
FB3-2679-000	640 - 9
FB3-2712-000	640 - 10
FB3-2765-000	102 - 17
FB3-2812-000	120 - 4
FB3-2815-000	120 - 5
FB3-2821-000	120 - 7
FB3-2829-000	103 - 4
FB3-2833-000	120 - 8
FB3-2834-000	120 - 9
FB3-2835-000	120 - 10
FB3-2836-000	315 - 6
FB3-2894-020	310 - 9
FB3-2896-000	310 - 10
FB3-2897-020	310 - 12
FB3-2898-020	310 - 13
FB3-2922-000	300 - 12
FB3-2926-000	300 - 13
FB3-2927-000	300 - 14
FB3-2928-000	300 - 25
FB3-2930-000	300 - 15
FB3-2934-000	300 - 16
FB3-2937-000	101 - 4
FB3-2942-000	300 - 1
FB3-2943-000	300 - 2
FB3-2947-000	101 - 8
FB3-2953-000	300 - 17
FB3-2955-000	300 - 18
FB3-2956-000	300 - 19
FB3-2996-000	103 - 28
FB3-2997-000	360 - 1
FB3-3192-030	106 - 1
FB3-8320-000	130 - 12A
FB4-2817-000	310 - 14
FB4-2935-000	360 - 3
FB4-2943-000	104 - 3
FB4-2944-000	104 - 4
FB4-2955-000	360 - 4
FB4-3057-000	640 - 11
FB4-3058-000	640 - 12
FB4-3061-000	102 - 7
FB4-3062-000	102 - 10
FB4-3063-000	102 - 11
FB4-3064-000	102 - 12
FB4-3065-000	102 - 13

PART NUMBER	FIGURE & KEY NO.
FB4-3066-000	102 - 14
FB4-3104-000	351 - 17
FB4-3170-000	120 - 11
FB4-3264-000	315 - 7
FB4-3265-000	315 - 8
FB4-3343-000	310 - 15
FB4-3355-000	640 - 13
FB4-5005-000	130 - 1
FB4-5349-000	310 - 18
FB4-5380-000	100 - 23
FB4-5382-000	104 - 21
FB4-5933-000	100 - 36
FB5-0281-000	102 - 4A
FB5-1471-000	101 - 5
FB5-2172-000	130 - 2
FB5-2173-000	130 - 3
FB5-2195-000	130 - 12C
FB5-3577-000	315 - 4
FB5-3578-000	315 - 5
FB5-3698-000	130 - 4
FB5-3699-000	130 - 5
FB5-3718-000	130 - 12B
FB5-3811-000	300 - 3
FB5-3812-000	300 - 26
FB5-3813-000	300 - 27
FB5-3928-000	101 - 2
FB5-4711-000	320 - 5
FB5-4713-000	320 - 6
FB5-4714-000	320 - 7
FB5-4720-000	103 - 29
FB5-4722-020	320 - 10
FB5-4726-000	103 - 12
FB5-4727-000	103 - 13
FB5-4728-000	310 - 24
FB5-4731-000	100 - 10
	100 - 15
FB5-4733-000	120 - 14
FB5-4735-000	300 - 4
FB5-4737-000	300 - 5
FB5-4738-000	300 - 5
FB5-4739-000	300 - 6
FB5-4740-000	300 - 7
FB5-4741-000	100 - 11
FB5-4743-000	300 - 8
FB5-4745-000	315 - 9
FB5-4747-000	360 - 5
FB5-4748-000	360 - 6
FB5-4749-000	360 - 7
FB5-4750-000	360 - 8
FB5-4754-000	360 - 9
FB5-4762-000	101 - 6
FB5-4766-000	120 - 15
FB5-4767-000	100 - 12
FB5-4768-000	100 - 16
FB5-4769-000	100 - 1
FB5-4772-000	100 - 13
FB5-4773-000	360 - 10
FB5-4776-000	310 - 71
FB5-4777-000	310 - 72
FB5-4779-000	310 - 25
FB5-4780-000	310 - 26
FB5-4782-000	330 - 1
FB5-4783-000	330 - 2
FB5-4785-000	330 - 3
FB5-4786-000	330 - 42
FB5-4787-000	330 - 4
	330 - 39
FB5-4788-000	330 - 5
FB5-4789-000	330 - 6
FB5-4790-000	330 - 7
FB5-4791-000	330 - 8
FB5-4793-000	330 - 9
FB5-4794-000	330 - 10
FB5-4795-000	330 - 11
FB5-4796-000	330 - 12
FB5-4798-000	330 - 13
FB5-4799-000	330 - 20
FB5-4800-000	330 - 21
FB5-4801-000	330 - 22
FB5-4802-000	330 - 23
FB5-4804-000	330 - 26
FB5-4805-000	330 - 27
FB5-4808-000	330 - 28
FB5-4811-000	330 - 18A
FB5-4812-000	330 - 33A

PART NUMBER	FIGURE & KEY NO.
FB5-4813-000	330 - 29
FB5-4814-000	330 - 18B
FB5-4816-000	104 - 12
FB5-4817-000	104 - 13
FB5-4819-000	104 - 2
FB5-4820-000	105 - 8
FB5-4821-000	280 - 3
FB5-4826-000	107 - 15
FB5-4827-000	107 - 16
FB5-4828-000	107 - 17
FB5-4829-000	107 - 18
FB5-4832-000	330 - 14
FB5-4833-000	330 - 30
FB5-4834-000	330 - 31
FB5-4835-000	330 - 15
FB5-4839-000	102 - 4B
	104 - 5
FB5-4853-000	350 - 1
FB5-4854-000	350 - 2
FB5-4855-000	350 - 16
FB5-4856-000	350 - 19
FB5-4858-000	350 - 4
FB5-4859-000	100 - 38
FB5-4860-000	100 - 39
FB5-4911-000	351 - 2
FB5-4912-000	351 - 3
FB5-4914-000	351 - 18
FB5-4915-000	351 - 19
FB5-4916-000	351 - 24
FB5-4918-000	351 - 25
FB5-4919-000	351 - 4
FB5-4920-000	351 - 26
FB5-4923-000	810 - 1
FB5-4925-000	810 - 2
FB5-4926-000	810 - 3
FB5-4927-000	810 - 4
FB5-4928-000	810 - 5
FB5-4929-000	810 - 35
FB5-4930-000	810 - 32A
FB5-4931-000	810 - 32B
FB5-4932-000	810 - 32C
FB5-4934-000	810 - 6
FB5-4938-000	810 - 7
FB5-4940-000	810 - 8
FB5-4941-000	810 - 9
FB5-4942-000	810 - 10
FB5-4943-000	810 - 11
FB5-4944-000	810 - 37
FB5-4948-000	810 - 36
FB5-4953-000	640 - 14
FB5-4965-000	640 - 15
FB5-4966-000	640 - 16
FB5-4968-000	640 - 17
FB5-4975-000	104 - 25
FB5-4976-000	104 - 16
FB5-4979-000	104 - 17
FB5-4986-000	500 - 1
FB5-5014-000	107 - 26
FB5-5019-000	500 - 2
FB5-5032-000	107 - 1
FB5-5036-000	250 - 4
FB5-5038-000	250 - 5
FB5-5039-000	250 - 6
FB5-5045-000	260 - 2
FB5-5046-000	260 - 3
FB5-5048-000	107 - 2
FB5-5052-000	100 - 24
FB5-5053-000	100 - 18
FB5-5055-000	100 - 2
FB5-5057-000	100 - 30
FB5-5058-000	100 - 3
FB5-5059-000	106 - 2
FB5-5061-000	100 - 27
FB5-5063-000	100 - 4
FB5-5066-000	100 - 47
FB5-5067-000	100 - 19
FB5-5068-000	100 - 45
FB5-5069-000	100 - 20
FB5-5070-000	100 - 21
FB5-5076-000	130 - 6
FB5-5077-000	130 - 7
FB5-5098-000	107 - 3
FB5-5143-000	100 - 37
FB5-5144-000	102 - 1
FB5-5145-000	120 - 16

COPYRIGHT ©2002 CANON INC.

PART NUMBER	FIGURE & KEY NO.
FB5-5146-000	320 - 8
FB5-5148-000	810 - 12
FB5-5150-000	320 - 14
	350 - 5
FB5-5155-000	102 - 2
FB5-5159-000	105 - 1
FB5-5160-000	104 - 6
FB5-5173-000	105 - 2
FB5-5175-000	103 - 11
FB5-5182-000	100 - 5
FB5-5185-000	102 - 3
FB5-5186-030	100 - 6
FB5-5192-000	104 - 7
FB5-5193-000	110 - 1
	111 - 3
FB5-5194-000	120 - 17
FB5-5195-000	120 - 18
FB5-5199-000	120 - 19
FB5-5200-020	120 - 20
FB5-5257-000	191 - 1
FB5-5258-000	191 - 2
FB5-5260-000	351 - 20
FB5-5261-000	351 - 21
FB5-5264-000	107 - 4
FB5-5265-000	104 - 23
FB5-5266-020	100 - 8
FB5-5267-000	100 - 9
FB5-5269-000	500 - 3
FB5-5270-000	500 - 4
FB5-5273-000	500 - 5
FB5-5279-000	500 - 6
FB5-5281-000	320 - 15
FB5-5282-000	320 - 16
FB5-5283-000	320 - 17
FB5-5286-000	310 - 27
FB5-5287-000	310 - 28
FB5-5288-000	320 - 9
FB5-5289-000	103 - 14
FB5-6612-000	900 - 19
FB5-8353-000	300 - 20
FB5-9249-000	106 - 8
FB5-9250-000	300 - 31
FB5-9252-000	106 - 3
FB5-9567-000	104 - 24
FB5-9787-000	350 - 23
FB5-9789-000	103 - 34
FB5-9794-000	310 - 20
FB5-9795-000	310 - 22
FB5-9801-000	103 - 27
FB5-9802-000	310 - 17
FB5-9806-000	100 - 34
FB5-9809-000	103 - 35
FB6-2767-000	351 - 11
FB6-2768-000	351 - 13
FB6-2769-000	351 - 14
FB6-2770-000	106 - 11
FB6-2776-000	310 - 1
FB6-2777-000	310 - 2
FB6-2778-000	310 - 3
FB6-2779-000	310 - 4
FB6-2780-000	310 - 5
FB6-2781-000	310 - 6
FB6-2782-000	310 - 7
FB6-2783-000	310 - 8
FB6-2784-000	360 - 2
FB6-2785-000	120 - 12
FB6-2786-000	120 - 13
FB6-2787-020	310 - 16
FB6-2788-000	120 - 6
FB6-2789-020	310 - 19
FB6-2790-000	310 - 21
FB6-2792-000	310 - 23
FB6-2852-000	100 - 28
FB6-2860-000	810 - 22
FB6-4433-000	100 - 42
FB6-4434-000	100 - 42
FB6-4435-000	100 - 42
FB6-4436-000	100 - 42
FB6-4577-000	310 - 75
FB6-5091-000	310 - 62
FE5-4046-000	330 - 32
FE5-4132-000	120 - 21
FE5-4134-000	640 - 18
FF3-1136-000	104 - 18
FF3-1171-000	101 - 10

PART NUMBER	FIGURE & KEY NO.
FF3-1173-000	330 - 16
FF3-2974-000	310 - 29
FF3-2975-000	310 - 30
FF3-4165-000	260 - 22
FF3-4172-000	190 - 1
FF3-4174-000	103 - 30
FF3-4175-000	310 - 31
FF3-4179-000	330 - 17
FF3-4188-000	640 - 19
FF3-4190-000	260 - 4
FF3-4191-000	900 - 6
	B1 - J1017
	B1 - J2005
FF3-4192-000	110 - 2
	B6 - PLG1
FF3-4193-000	110 - 3
	B6 - PLG1
FF3-4194-000	111 - 4
FF3-4197-000	900 - 4
FF3-4199-000	900 - 1
FF5-1458-020	104 - 19
FF5-4480-000	640 - 20
FF5-4481-000	640 - 21
FF5-4491-000	300 - 28
FF5-4548-030	300 - 29
FF5-4552-020	310 - 32
FF5-4569-020	300 - 21
FF5-4634-020	310 - 33
FF5-7246-000	330 - 43
FF6-0074-020	100 - 25
FF6-0086-000	103 - 5
FF6-0087-000	101 - 16
FF6-0092-000	106 - 9
FF6-0094-000	300 - 9
FF6-0096-000	101 - 18
FF6-0097-000	103 - 6
FF6-0098-000	300 - 22
FF6-0099-000	300 - 22
FF6-0100-000	310 - 34
FF6-0101-000	120 - 22
FF6-0102-000	106 - 10
FF6-0104-000	330 - 40
FF6-0105-000	330 - 18
FF6-0106-000	330 - 33
FF6-0107-000	102 - 4
FF6-0108-000	310 - 73
FF6-0109-000	310 - 74
FF6-0111-000	106 - 5
FF6-0112-000	101 - 9
FF6-0132-000	350 - 3
FF6-0138-000	102 - 5
FF6-0139-000	351 - 22
FF6-0141-000	280 - 4
FF6-0153-000	640 - 22
FF6-0154-000	640 - 23
FF6-0155-000	640 - 24
FF6-0156-000	640 - 25
FF6-0157-000	640 - 26
FF6-0160-000	500 - 7
FF6-0166-000	107 - 27
FF6-0186-000	260 - 5
FF6-0206-000	130 - 8
FF6-0243-000	106 - 16
FF6-0244-000	107 - 5
FF6-0245-000	105 - 7
FF6-0247-000	106 - 4
FF6-0345-000	350 - 8
FG3-0133-000	107 - 20
	B7 - 8
FG3-1592-000	460 - 1
FG3-1596-000	320 - 4
FG3-1597-000	360 - 18
FG3-1598-000	350 - 15
FG3-1599-000	351 - 16
FG3-1600-000	810 - 31
FG3-1602-000	102 - 9
FG3-1603-000	910 -
	B7 - 1
FG3-1604-000	910 -
	B7 - 1
FG3-1608-000	107 - 12
	B7 - 11
FG3-1612-000	930 -
	B7 - 4
FG3-1613-000	930 -

PART NUMBER	FIGURE & KEY NO.
FG3-1613-000	B7 - 4
FG3-1615-000	191 - 7
FG3-1616-000	107 - 13
FG3-1617-000	101 - 14
	B4 - S4
FG3-1618-000	101 - 15
	B4 - S5
FG3-1620-050	930 - 1
FG3-1624-000	107 - 21
FG3-1625-000	107 - 22
FG3-1626-000	107 - 23
FG3-1744-000	107 - 25
	B7 - 10
FG3-1795-000	920 -
	B7 - 9
FG3-1994-000	900 - 7
FG3-1995-000	107 - 11
FG3-2231-000	B7 - 10
FG3-2232-000	900 - 3
FG3-2238-000	900 - 9
FG3-2478-000	900 - 20
FG3-2481-000	900 - 21
FG3-2772-000	900 - 20
FG3-2959-000	900 - 17
	B7 - 16
FG5-6289-000	315 - 13
	B4 - VR1
FG5-6297-000	102 - 18
	B6 - LAMP2
FG6-0455-000	940 -
	B7 - 5
FG6-0561-000	102 - 6
FG6-5633-000	460 -
	B2 - M10
	B4 - BD
	B7 - 6
FG6-5638-000	190 -
FG6-5644-100	103 - 23
FG6-5648-000	120 -
FG6-5649-000	315 -
FG6-5650-000	360 -
FG6-5651-000	261 -
FG6-5670-000	330 -
FG6-5691-000	350 -
FG6-5698-000	351 -
FG6-5702-000	810 -
FG6-5703-000	280 -
FG6-5709-000	810 - 32
FG6-5710-000	810 - 33
	B4 - PS26
FG6-5712-000	810 - 34
	B6 - H1
	B6 - H2
	B6 - TH1
	B6 - TH2
	B6 - TP1
FG6-5713-000	640 -
FG6-5714-000	640 - 44
FG6-5726-000	260 -
FG6-5727-000	250 -
FG6-5736-000	100 - 17
FG6-5753-000	130 -
FG6-5754-000	130 -
FG6-5755-000	130 -
FG6-5756-000	130 -
FG6-5777-000	110 -
	B5 - SW1
	B5 - SW2
	B7 - 3
FG6-5781-000	110 -
	B5 - SW1
	B5 - SW2
	B7 - 3
FG6-5782-000	111 -
	B5 - SW1
	B5 - SW2
	B7 - 3
FG6-5795-000	900 - 16
	B7 - 15
FG6-5814-000	191 -
FG6-5815-000	107 - 30
FG6-5831-000	900 - 10
	B7 - 12
FG6-5964-000	900 - 15
	B7 - 13

PART NUMBER	FIGURE & KEY NO.
FG6-6038-000	810 -
FG6-6039-000	810 - 34
	B6 - H1
	B6 - H2
	B6 - TH1
	B6 - TH2
	B6 - TP1
FG6-6040-000	810 -
FG6-6041-000	810 - 34
	B6 - H1
	B6 - H2
	B6 - TH1
	B6 - TH2
	B6 - TP1
FG6-6069-000	950 -
	B7 - 14
FG6-7021-000	130 - 12
	B7 - 9
FG6-7022-000	130 - 13
FG6-7068-000	130 - 14
FG6-7069-000	130 - 15
FG6-7070-000	130 - 16
FG6-7071-000	130 - 17
FG6-7738-000	921 -
	B7 - 9
FG6-9149-000	130 - 18
FH2-5006-000	110 - 6
FH2-5761-020	111 - 1
	B6 - PLG1
FH2-5763-000	111 - 7
	B6 - PLG1
FH2-5824-000	100 - 48
FH2-5825-000	B1 - J2
FH2-6552-000	107 - 6
	107 - 7
FH2-6842-000	130 - 9
	B1 - J9801
	B1 - J9802
FH2-6855-000	B1 - J2
FH2-6941-00G	111 - 2
	B6 - PLG1
FH3-0961-000	921 - T1
FH3-2613-000	107 - 8
	B7 - 2
FH3-2614-000	107 - 8
	B7 - 2
FH3-2615-000	107 - 9
	B7 - 7
FH3-2616-000	107 - 9
	B7 - 7
FH4-1380-000	920 - Q6822
FH4-6001-000	930 - IC315
	930 - IC316
FH4-6002-000	940 - IC1601
FH4-6072-000	950 - IC8
FH4-6085-000	900 - IC1009
FH4-6123-000	900 - IC1003
	930 - IC309
FH4-6141-000	930 - IC334
FH4-6145-000	900 - IC1005
FH4-6152-000	950 - IC4
FH4-6208-000	950 - IC3
FH5-3127-000	900 - 18
FH5-3278-000	900 - 22
FH5-3279-000	900 - 22
FH5-3326-000	900 - 20
FH5-3330-000	900 - 21
FH6-0784-000	130 - 10
FH6-1253-000	103 - 31
	B2 - M3
FH6-1477-000	310 - 35
	B2 - M2
FH6-1845-000	250 - 1
	B2 - M1
FH6-1848-000	280 - 5
	B2 - M4
FH6-1849-000	260 - 6
	B2 - M9
FH6-1850-000	350 - 10
	B2 - M5
FH6-1851-000	261 - 1
	B2 - M6
FH6-1852-000	190 - 2
	191 - 3
	B3 - FM1

PART NUMBER	FIGURE & KEY NO.
FH6-1852-000	B3 - FM2
FH6-1854-000	351 - 5
	B3 - FM4
	B3 - FM5
FH6-1885-000	900 - 5
	B3 - FM3
FH6-5005-000	310 - 36
	B5 - CL1
FH6-5006-000	260 - 7
	B5 - CL2
FH6-5007-000	250 - 7
	B5 - CL3
FH6-5020-000	310 - 37
	B5 - SL1
FH6-5048-000	191 - 4
	B5 - SL6
FH6-5051-000	260 - 8
	B5 - SL5
FH7-4576-000	106 - 14
	B6 - H3
FH7-7422-000	640 - 27
	B4 - S1
FH7-7462-000	103 - 32
	310 - 38
	320 - 11
	360 - 12
	810 - 13
	B4 - PS7
	B4 - PS8
	B4 - PS9
	B4 - PS10
	B4 - PS11
	B4 - PS13
	B4 - PS17
	B4 - PS18
	B4 - PS22
	B4 - PS23
FH7-7527-000	111 - 5
	B6 - CB1
FH7-7528-000	110 - 4
	B6 - CB1
FH7-7557-000	330 - 24
	350 - 11
	B4 - PS12
	B4 - PS15
	B4 - PS16
FH7-7559-000	190 - 3
	B4 - S3
FH9-0585-000	940 - Q1604
	940 - Q1605
	940 - Q1606
	940 - Q1607
	940 - Q1608
	940 - Q1609
	B4 - PS1
	B4 - PS2
	B4 - PS3
	B4 - PS4
	B4 - PS5
	B4 - PS6
FM5-5153-000	107 - 29
	B4 - S2
FS1-1189-000	104 - 8
	104 - 14
FS1-1202-000	350 - 20
	351 - 6
FS1-1594-000	640 - 28
FS1-9005-000	280 - 6
FS1-9010-000	310 - 49
FS2-1431-000	104 - 9
FS2-2783-000	103 - 7
	330 - 34
FS5-1212-000	640 - 29
FS5-1261-000	103 - 8
FS5-1589-000	103 - 15
	310 - 39
FS5-1598-000	120 - 23
FS5-1943-000	260 - 9
	350 - 6
	350 - 12
	351 - 7
FS5-1944-000	103 - 9
	330 - 35
FS5-1945-000	810 - 32D
FS5-1946-000	310 - 40

PART NUMBER	FIGURE & KEY NO.
FS5-1947-000	260 - 10
FS5-1948-000	310 - 41
FS5-1949-000	320 - 12
FS5-1950-000	120 - 24
FS5-1953-000	106 - 12
FS5-2312-000	250 - 8
FS5-2331-000	280 - 7
FS5-2650-000	300 - 30
FS5-3177-000	315 - 10
FS5-3620-000	310 - 42
FS5-3815-000	250 - 9
FS5-3820-000	330 - 45
FS5-3821-000	103 - 16
FS5-3822-000	103 - 17
FS5-3823-000	103 - 18
FS5-3824-000	260 - 11
FS5-3830-000	310 - 43
FS5-3831-000	103 - 19
FS5-3833-000	310 - 44
FS5-6448-000	640 - 30
FS5-8612-000	315 - 14
FS5-8613-000	315 - 14
FS5-8614-000	315 - 14
FS5-8615-000	315 - 14
FS5-9210-000	104 - 10
FS5-9397-000	101 - 11
FS5-9661-000	100 - 29
FS5-9663-000	105 - 4
FS5-9664-000	360 - 11
FS6-0552-000	640 - 31
FS6-0564-000	310 - 45
FS6-0565-000	310 - 46
FS6-0572-000	103 - 20
FS6-0579-000	640 - 32
FS6-0592-000	640 - 33
FS6-2311-000	101 - 12
FS6-2328-020	310 - 51
FS6-2330-000	310 - 52
FS6-2331-000	310 - 53
FS6-2337-000	120 - 26
FS6-2784-000	102 - 15
FS6-2790-000	120 - 27
FS6-2791-000	120 - 28
FS6-2900-000	310 - 54
FS6-8116-000	300 - 21A
FS7-0103-000	310 - 55
FS7-0104-000	310 - 56
FS7-0701-000	351 - 8
FS7-0702-000	280 - 8
FS7-0703-000	280 - 9
FS7-0704-000	280 - 10
FS7-0705-000	280 - 11
FS7-0707-000	106 - 13
FS7-0708-000	810 - 14
FS7-0709-000	810 - 15
FS7-0717-000	640 - 34
FS7-0718-000	640 - 35
FS7-0719-000	640 - 36
FS7-0720-000	640 - 37
FS7-0721-000	640 - 38
FS7-0722-000	360 - 13
FS7-0723-000	360 - 14
FS7-0725-000	260 - 12
FS7-0726-000	260 - 13
FS7-0727-000	260 - 14
FS7-0728-000	260 - 15
FS7-0729-000	260 - 16
FS7-0730-000	260 - 17
FS7-0731-000	260 - 18
FS7-0737-000	260 - 19
FS7-0738-000	103 - 10
FS7-0739-000	330 - 36
FS7-0740-000	330 - 37
FS7-0744-000	350 - 21
FS7-0745-000	350 - 17
FS7-0746-000	350 - 13
FS7-0747-000	350 - 14
FS7-0750-000	103 - 33
FS7-0752-000	310 - 58
FS7-0753-000	260 - 20
FS7-0754-000	640 - 39
FS7-0755-000	640 - 40
FS7-0756-000	310 - 48
FS7-0757-000	310 - 57
FS7-0758-000	310 - 47

COPYRIGHT ©2002 CANON INC.

PART NUMBER	FIGURE & KEY NO.
FS7-0760-000	103 - 21
FS7-0761-000	120 - 25
FS7-2287-000	101 - 7
FS7-2288-000	101 - 17
	101 - 19
FS7-2372-000	351 - 9
FS7-2373-000	810 - 16
FS7-2374-000	810 - 17
FS7-2375-000	810 - 18
FS7-2380-000	105 - 3
FS7-2382-000	330 - 19
	330 - 41
FS7-2383-000	330 - 38
FS7-2385-000	107 - 10
FS7-2386-000	104 - 11
FS7-2387-000	104 - 22
FS7-2390-000	350 - 7
FS7-2398-000	351 - 23
FS7-2400-000	300 - 10
FS7-2404-000	100 - 14
FS7-2405-000	640 - 41
FS7-2406-000	120 - 29
FS7-2408-000	310 - 59
FS7-2409-000	310 - 60
FS7-2410-000	105 - 5
FS7-2411-000	102 - 16
FS7-2413-000	310 - 11
FS7-2414-000	310 - 50
FS7-8071-000	300 - 32
FS7-8072-000	300 - 33
FS7-8267-000	810 - 32E
PCB	B1 - J1
	B1 - J2
	B1 - J2
	B1 - J3
	B1 - J4
	B1 - J5
	B1 - J5
	B1 - J6
	B1 - J6
	B1 - J7
	B1 - J8
	B1 - J11
	B1 - J11
	B1 - J20
	B1 - J100
	B1 - J100
	B1 - J110
	B1 - J111
	B1 - J120
	B1 - J121
	B1 - J122
	B1 - J124
	B1 - J126
	B1 - J127
	B1 - J130
	B1 - J131
	B1 - J135
	B1 - J136
	B1 - J200
	B1 - J201
	B1 - J202
	B1 - J203
	B1 - J204
	B1 - J205
	B1 - J208
	B1 - J300
	B1 - J301
	B1 - J302
	B1 - J304
	B1 - J307
	B1 - J308
	B1 - J309
	B1 - J310
	B1 - J311
	B1 - J312
	B1 - J313
	B1 - J314
	B1 - J315
	B1 - J316
	B1 - J316
	B1 - J320
	B1 - J332
	B1 - J500
	B1 - J501

PART NUMBER	FIGURE & KEY NO.
PCB	B1 - J701
	B1 - J702
	B1 - J707
	B1 - J708
	B1 - J712
	B1 - J713
	B1 - J716
	B1 - J717
	B1 - J1011
	B1 - J1011
	B1 - J1015
	B1 - J1017
	B1 - J1018
	B1 - J1019
	B1 - J1020
	B1 - J1021
	B1 - J1022
	B1 - J1023
	B1 - J1024
	B1 - J1027
	B1 - J1028
	B1 - J1050
	B1 - J1058
	B1 - J1059
	B1 - J1060
	B1 - J1061
	B1 - J1101
	B1 - J1102
	B1 - J1103
	B1 - J1104
	B1 - J1601
	B1 - J1602
	B1 - J1603
	B1 - J1604
	B1 - J1607
	B1 - J1608
	B1 - J2060
	B1 - J3110
	B1 - J6801
	B1 - J6803
	B1 - J6804
	B1 - J6805
	B1 - J6806
	B1 - J6807
	B1 - J6808
	B1 - J7040
	B1 - J7050
	B1 - J9201
	B1 - J9202
	B1 - J9203
	B1 - J9802
RA9-1124-000	351 - 10
RB1-6539-000	310 - 61
RB1-6592-000	310 - 63
RB1-6653-000	351 - 12
RB1-7067-000	900 - 2
RB2-1920-000	810 - 19
RB2-1929-000	810 - 20
RB2-1930-000	810 - 21
RB2-1947-000	810 - 23
RB2-4389-000	810 - 24
RH2-5281-000	B1 - J3201
RH2-5317-000	B1 - J3201
RH5-3058-000	810 - 25
RS1-1087-000	810 - 26
RS5-1446-000	810 - 27
RS5-2489-000	351 - 15
RS6-0354-000	810 - 28
RS6-2192-000	810 - 32F
RS6-8382-000	100 - 41
	100 - 44
	460 - 4
VD7-0211-001	110 - 5
VD7-0213-151	910 - FU1
VD7-0602-001	930 - FU300
	930 - FU301
	930 - FU303
	930 - FU304
VD7-0602-501	930 - FU302
VD7-0641-001	111 - 6
VD7-0641-601	910 - FU1
VD7-0792-501	940 - FU1601
VD7-1622-001	921 - FU1
VS1-0842-002	B1 - J1
VS1-0842-003	B1 - J3026

PART NUMBER	FIGURE & KEY NO.
VS1-0842-003	B1 - J6804
VS1-0842-004	B1 - J1060
	B1 - J3025
VS1-5057-002	102 - 21
	107 - 19
	191 - 5
	250 - 10
	260 - 21
	460 - 2
	810 - 31A
	B1 - J21
	B1 - J3023
	B1 - J3052
	B1 - J3081
	B1 - J3082
	B1 - J3083
	B1 - J3125
	B1 - J3202
	B1 - J9021
VS1-5057-003	104 - 18A
	190 - 4
	191 - 6
	315 - 11
	320 - 4A
	330 - 44
	351 - 16A
	460 - 3
	B1 - J3020
	B1 - J3021
	B1 - J3024
	B1 - J3042
	B1 - J3084
	B1 - J3118
	B1 - J3119
	B1 - J3122
	B1 - J3127
VS1-5057-004	107 - 28
	190 - 1A
	261 - 2
	350 - 15A
	B1 - J3025
	B1 - J3115
	B1 - J3141
	B1 - J3144
	B1 - J3151
VS1-5057-006	101 - 21
	320 - 4B
	360 - 18A
	B1 - J3041
	B1 - J3111
	B1 - J3117
	B1 - J3121
	B1 - J3145
VS1-5057-007	101 - 22
	B1 - J3120
VS1-5057-010	B1 - J3140
VS1-5057-012	B1 - J3130
VS1-5057-013	B1 - J3900
VS1-5452-004	B1 - J3029
VS1-5729-002	B1 - J3053
VS1-5729-004	B1 - J3172
	B1 - J4101
VS1-5824-002	B1 - J21
	B1 - J3052
	B1 - J3202
VS1-5824-003	B1 - J3021
	B1 - J3042
	B1 - J3043
VS1-6302-002	B1 - J127
	B1 - J332
	B1 - J716
	B1 - J1027
VS1-6302-003	B1 - J717
VS1-6302-004	B1 - J122
	B1 - J320
	B1 - J1058
	B1 - J3200
VS1-6302-006	B1 - J309
	B1 - J3090
VS1-6302-009	B1 - J126
VS1-6302-010	B1 - J124
	B1 - J900
VS1-6302-015	B1 - J121
	B1 - J1020
VS1-6313-004	B1 - J500

PART NUMBER	FIGURE & KEY NO.
VS1-6313-005	B1 - J501
VS1-6313-009	B1 - J311
VS1-6313-010	B1 - J308
	B1 - J314
VS1-6313-011	B1 - J315
VS1-6313-012	B1 - J304
	B1 - J313
	B1 - J3040
VS1-6313-013	B1 - J301
	B1 - J1019
	B1 - J1050
VS1-6313-015	B1 - J312
VS1-6313-018	B1 - J302
	B1 - J1018
	B1 - J6801
VS1-6314-003	B1 - J110
	B1 - J201
	B1 - J701
	B1 - J1021
	B1 - J3028
	B1 - J16030
	B1 - J16070
VS1-6314-004	B1 - J307
	B1 - J712
	B1 - J1059
	B1 - J1061
	B1 - J9203
VS1-6314-005	B1 - J4
	B1 - J310
	B1 - J3128
VS1-6314-006	B1 - J111
	B1 - J1104
	B1 - J6807
VS1-6314-008	B1 - J1103
	B1 - J6808
VS1-6314-009	B1 - J311
VS1-6314-010	B1 - J308
	B1 - J314
	B1 - J1024
	B1 - J1102
	B1 - J6805
VS1-6314-011	B1 - J20
	B1 - J315
	B1 - J1023
	B1 - J1101
	B1 - J6806
VS1-6314-012	B1 - J304
	B1 - J313
	B1 - J3040
VS1-6314-013	B1 - J301
	B1 - J1019
	B1 - J1050
VS1-6314-015	B1 - J312
VS1-6314-018	B1 - J302
	B1 - J1018
	B1 - J1601
	B1 - J6801
VS1-6319-024	320 - 4C
	B1 - J3040
VS1-6320-003	B1 - J3046
	B1 - J3047
	B1 - J3143
VS1-6320-012	B1 - J136
VS1-6321-002	B1 - J21
	B1 - J3023
	B1 - J3052
	B1 - J3081
	B1 - J3082
	B1 - J3083
	B1 - J3110
	B1 - J3125
	B1 - J9020
	B1 - J9021
VS1-6321-003	B1 - J1607
	B1 - J1608
	B1 - J3020
	B1 - J3021
	B1 - J3024
	B1 - J3042
	B1 - J3044
	B1 - J3045
	B1 - J3084
	B1 - J3112
	B1 - J3113
	B1 - J3118

PART NUMBER	FIGURE & KEY NO.
VS1-6321-003	B1 - J3119
	B1 - J3122
	B1 - J3123
	B1 - J3127
	B1 - J3142
	B1 - J3146
	B1 - J3147
	B1 - J16080
VS1-6321-004	B1 - J707
	B1 - J1603
	B1 - J3025
	B1 - J3086
	B1 - J3115
	B1 - J3129
	B1 - J3141
	B1 - J3144
	B1 - J3151
VS1-6321-005	B1 - J3124
VS1-6321-006	B1 - J1022
	B1 - J3041
	B1 - J3111
	B1 - J3117
	B1 - J3121
	B1 - J3145
VS1-6321-007	B1 - J208
	B1 - J708
	B1 - J3120
VS1-6321-008	B1 - J47
	B1 - J205
VS1-6321-010	B1 - J3140
VS1-6321-012	B1 - J136
	B1 - J3130
VS1-6321-013	B1 - J3900
VS1-6407-080	B1 - J1015
	B1 - J9201
VS1-6534-002	B1 - J7100
VS1-6702-004	B1 - J3200
VS3-0247-004	B1 - J3022
VS3-0248-004	B1 - J3022
VS3-5083-002	B1 - J135
	B1 - J713
	B1 - J3053
VS3-5083-003	B1 - J200
	B1 - J3088
	B1 - J3126
VS3-5083-004	B1 - J120
	B1 - J702
	B1 - J4101
VS3-5083-005	B1 - J131
VS3-5083-006	B1 - J202
VS3-5083-007	B1 - J130
	B1 - J203
VS3-5083-008	B1 - J300
VS3-5083-010	B1 - J204
VS3-5116-006	B1 - J7
VS3-5121-003	B1 - J2003
VS3-5122-003	B1 - J2003
VS4-0001-002	B1 - J4
	B1 - J2002
VS4-0001-004	B1 - J2
VS4-0002-002	B1 - J2000
	B1 - J2001
VT2-5161-018	B1 - J311
VT2-5161-020	B1 - J308
	B1 - J314
VT2-5161-022	B1 - J315
VT2-5161-024	B1 - J304
	B1 - J313
	B1 - J3040
VT2-5161-026	B1 - J301
	B1 - J1019
	B1 - J1050
VT2-5161-030	B1 - J312
VT2-5161-036	B1 - J302
	B1 - J1018
	B1 - J6801
VT2-5162-024	B1 - J136
WA7-1497-000	900 - 11
WA7-1780-000	900 - 12
WC8-5178-000	102 - 8
	B5 - SW3
WE8-5857-000	351 - 16C
WE8-5925-000	900 - 8
WK1-0084-000	930 - 2
WK1-5019-000	900 - 13

PART NUMBER	FIGURE & KEY NO.
WM2-5158-000	107 - 24
WM2-5160-000	107 - 24
WS3-5160-000	B1 - J120
	B1 - J130
	B1 - J131
	B1 - J135
	B1 - J200
	B1 - J202
	B1 - J203
	B1 - J204
	B1 - J300
	B1 - J702
	B1 - J713
	B1 - J3053
	B1 - J3088
	B1 - J3126
	B1 - J4101
WS3-5174-000	B1 - J7
	B1 - J8
WS3-5291-000	B1 - J2003
WS3-5292-000	B1 - J2003
WS3-5301-000	B1 - J3053
	B1 - J3172
	B1 - J4101
WS3-5358-000	B1 - J21
	B1 - J3021
	B1 - J3042
	B1 - J3043
	B1 - J3052
	B1 - J3202
WS3-5399-000	B1 - J8
WS3-5403-000	B1 - J3022
WS3-5569-000	B1 - J121
	B1 - J122
	B1 - J124
	B1 - J126
	B1 - J127
	B1 - J309
	B1 - J320
	B1 - J332
	B1 - J716
	B1 - J717
	B1 - J900
	B1 - J1020
	B1 - J1027
	B1 - J1058
	B1 - J3090
	B1 - J3200
WS3-5595-000	B1 - J3022
WS3-5658-000	B1 - J7100
WS3-5720-000	B1 - J3200
WS4-0217-000	B1 - J2000
	B1 - J2001
WS4-0219-000	B1 - J2
	B1 - J4
	B1 - J2002
WT2-5041-000	106 - 15
WT2-5565-000	103 - 30A
	320 - 4D
	320 - 13
	351 - 16B
	360 - 18B
X71-9310-000	640 - 42
XA9-0134-000	810 - 29
XA9-0266-000	100 - 43
XA9-0591-000	103 - 22
	130 - 11
	300 - 11
	310 - 65
XA9-0605-000	100 - 22
	100 - 40
	120 - 33
	350 - 9
	351 - 27
XA9-0606-000	315 - 15
XA9-0626-000	101 - 3
	101 - 13
XA9-0700-000	104 - 15
XA9-0702-000	810 - 30
XA9-0714-000	640 - 43
XA9-0721-000	101 - 1
	106 - 6
XA9-1289-000	105 - 6
XA9-1301-000	100 - 35
XB1-2300-407	107 - 504

COPYRIGHT ©2002 CANON INC.

PART NUMBER	FIGURE & KEY NO.	PART NUMBER	FIGURE & KEY NO.	PART NUMBER	FIGURE & KEY NO.
XB1-2300-409	104 - 506	XB6-7300-609	250 - 501		
	106 - 503		280 - 503		
	191 - 501	XB6-7400-609	101 - 504		
	300 - 503		104 - 504		
	310 - 501	XB6-7400-807	107 - 503		
	330 - 507		107 - 506		
	640 - 501	XB6-7401-206	100 - 505		
XB1-2300-607	107 - 501	XB6-7501-007	104 - 502		
	107 - 507	XD1-1106-215	310 - 502		
	130 - 501	XD1-4200-402	110 - 504		
	900 - 501	XD2-1100-242	360 - 502		
	900 - 503	XD2-1100-322	330 - 508		
XB1-2300-609	102 - 502	XD2-1100-402	103 - 502		
	103 - 508		330 - 513		
	107 - 508	XD2-1100-502	103 - 503		
	110 - 501		250 - 503		
	260 - 501		260 - 503		
	300 - 501		320 - 502		
	300 - 504		330 - 509		
XB1-2300-805	350 - 501		350 - 502		
	350 - 503		350 - 504		
	640 - 502		350 - 505		
XB1-2301-009	101 - 503		350 - 506		
XB1-2400-409	106 - 506		351 - 501		
XB1-2400-606	106 - 505		360 - 503		
XB1-2400-803	110 - 502		810 - 501		
XB1-2400-809	120 - 501	XD2-1100-642	103 - 504		
XB1-2401-809	330 - 501		104 - 503		
XB1-2402-007	900 - 504		104 - 505		
XB1-2402-009	110 - 503		260 - 504		
	111 - 501		330 - 510		
XB2-7400-607	107 - 509		810 - 502		
	110 - 505	XD2-2100-402	310 - 506		
	111 - 502	XD2-2100-502	315 - 502		
XB2-8300-607	130 - 502	XD2-2100-602	120 - 503		
XB2-8300-807	102 - 503	XD2-2100-802	310 - 504		
	102 - 504		640 - 505		
XB2-8400-809	330 - 502	XD3-1200-122	310 - 505		
XB3-6300-600	360 - 501	XD3-1300-102	191 - 503		
XB3-6300-605	330 - 503	XD3-2160-102	330 - 511		
	330 - 506	XD3-2160-162	120 - 502		
XB3-6300-609	103 - 506	XD3-2200-122	106 - 504		
	260 - 502	XD3-2200-142	260 - 505		
	261 - 501	XD9-0103-000	360 - 16		
	280 - 501	XD9-0104-000	120 - 30		
XB3-6300-800	103 - 507		310 - 66		
	104 - 507		350 - 18		
	310 - 503		350 - 22		
	320 - 501	XD9-0131-000	310 - 67		
XB3-6400-800	100 - 502		640 - 45		
	100 - 503	XD9-0134-000	120 - 31		
	100 - 507	XD9-0137-000	310 - 68		
	101 - 501		310 - 76		
	102 - 501	XD9-0206-000	100 - 31		
	103 - 501	XF2-1121-540	310 - 69		
	104 - 501	XF2-3110-840	103 - 24		
	104 - 508	XF2-3112-940	360 - 17		
	105 - 501	XF2-3113-140	103 - 25		
	105 - 502	XF9-0393-000	315 - 12		
	105 - 503	XG9-0111-000	640 - 46		
	106 - 501	XG9-0218-000	640 - 47		
	106 - 502	XG9-0250-000	103 - 26		
	107 - 502	XG9-0262-000	640 - 48		
	330 - 504	XG9-0403-000	310 - 70		
XB3-6400-805	100 - 501	XG9-0407-000	120 - 32		
	101 - 502	XG9-0455-000	310 - 64		
XB3-7400-809	103 - 505	XG9-0482-000	360 - 15		
XB4-7300-609	100 - 504	XH9-0125-000	106 - 7		
	300 - 506	XZ9-0526-000	102 - 20		
	315 - 501	XZ9-0527-000	102 - 19		
XB4-7300-809	190 - 501				
	300 - 505				
	640 - 503				
XB4-7301-609	640 - 504				
XB4-7400-807	900 - 502				
XB4-7400-809	100 - 506				
	330 - 505				
	330 - 512				
XB4-7401-009	300 - 502				
XB4-7403-509	190 - 502				
	191 - 502				
XB5-2401-609	280 - 502				
XB6-2300-409	250 - 502				
XB6-7300-407	107 - 505				
XB6-7300-605	102 - 505				

D3 NUMERICAL INDEX (Cassette Feeding Unit - W1)

PART NUMBER	FIGURE & KEY NO.
FB3-2210-000	Z11 - 1
FB3-2811-000	Z12 - 1
FB3-2837-000	Z12 - 2
FB3-2855-020	Z40 - 2
FB3-2856-020	Z40 - 3
FB3-2863-000	Z40 - 4
FB3-2864-000	Z40 - 5
FB3-2868-020	Z40 - 6
FB3-2880-000	Z40 - 7
FB3-2881-000	Z40 - 8
FB3-2889-000	Z40 - 88
FB3-2894-020	Z40 - 9
FB3-2897-020	Z40 - 10
FB3-2898-020	Z40 - 11
FB3-2937-000	Z11 - 20
FB3-2948-000	Z11 - 27
FB3-3192-030	Z32 - 1
FB3-4144-000	Z11 - 2
FB3-4149-000	Z40 - 12
FB3-4151-000	Z12 - 3
FB3-4154-000	Z12 - 4
FB3-4155-000	Z40 - 13
FB3-7192-000	Z32 - 2
FB3-7216-000	Z11 - 3
FB4-3343-000	Z40 - 14
FB4-3801-000	Z40 - 15
FB4-5347-000	Z40 - 16
FB4-5349-000	Z40 - 18
FB4-5350-000	Z40 - 19
FB4-5365-000	Z40 - 21
FB4-5367-000	Z40 - 23
FB5-1471-000	Z11 - 21
FB5-2340-000	Z12 - 5
FB5-3540-000	Z11 - 13
FB5-3928-000	Z11 - 18
FB5-4726-000	Z40 - 24
FB5-4727-000	Z40 - 25
FB5-4728-000	Z40 - 26
FB5-4762-000	Z11 - 22
FB5-5162-000	Z11 - 4
FB5-5286-000	Z40 - 29
FB5-5287-000	Z40 - 30
FB5-5289-000	Z40 - 31
FB5-5385-000	Z10 - 1
FB5-5386-000	Z10 - 2
FB5-5387-000	Z10 - 3
FB5-5396-000	Z20 - 1
FB5-5397-000	Z11 - 5
FB5-5398-000	Z11 - 6
FB5-5399-000	Z10 - 4
FB5-5400-000	Z11 - 14
FB5-5402-000	Z40 - 32
FB5-5403-000	Z35 - 1
FB5-5404-000	Z40 - 33
FB5-5405-000	Z40 - 34
FB5-5412-000	Z40 - 27
FB5-5413-000	Z40 - 28
FB5-5415-000	Z40 - 1
FB5-9794-000	Z40 - 20
FB5-9795-000	Z40 - 22
FB5-9802-000	Z40 - 17
FE9-0290-000	Z11 - 15
FF3-1171-000	Z11 - 28
FF3-1318-000	Z11 - 7
FF3-2974-000	Z40 - 35
FF3-2975-000	Z40 - 36
FF3-4175-000	Z40 - 37
FF3-4287-000	Z11 - 32A
FF3-4341-000	Z11 - 33A
FF5-4552-020	Z40 - 38
FF5-4634-020	Z40 - 39
FF5-4901-000	Z11 - 8
FF5-4903-000	Z40 - 40
FF5-4908-000	Z35 - 2
FF6-0087-000	Z11 - 24
FF6-0096-000	Z11 - 26
FF6-0108-000	Z40 - 86
FF6-0109-000	Z40 - 87
FF6-0297-000	Z40 - 41
FF6-0299-000	Z40 - 42
FG3-1730-000	Z11 - 12
FG3-1731-000	Z11 - 34
FG3-1732-000	Z11 - 35
FG3-1733-000	Z11 - 11
FG3-1734-000	Z11 - 19

PART NUMBER	FIGURE & KEY NO.
FG3-1761-000	Z11 - 32
	Z B2 - S1
FG3-1896-000	Z11 - 33
	Z B2 - S2
FG6-0767-000	Z91 -
	Z B2 - 1
	Z B2 - Q1603
	Z B2 - Q1604
	Z B2 - Q1605
	Z B2 - Q1606
	Z B2 - Q1607
	Z B2 - Q1608
	Z B2 - Q1609
FG6-0770-000	Z90 -
	Z B2 - 2
FG6-5987-000	Z12 -
FG6-5988-000	Z20 -
FG6-5989-000	Z40 -
FG6-5993-000	Z35 -
FG6-5995-000	Z32 - 5
FH2-6481-000	Z B1 - J2060
FH2-6706-000	Z32 - 6
	Z B2 - P1
FH6-1477-000	Z40 - 43
	Z B2 - M2
FH6-1523-000	Z20 - 2
	Z B2 - M1
FH6-5005-000	Z40 - 44
	Z B2 - CL1
FH6-5020-000	Z40 - 45
	Z B2 - SL1
FH7-4576-000	Z32 - 3
	Z B2 - H1
FH7-7394-000	Z35 - 3
	Z B2 - PS1
FH7-7462-000	Z40 - 46
	Z B2 - PS2
	Z B2 - PS3
FS1-1401-000	Z20 - 3
FS5-1164-000	Z40 - 47
FS5-1589-000	Z40 - 48
FS5-1594-020	Z35 - 4
FS5-1595-000	Z12 - 6
FS5-1598-000	Z12 - 7
FS5-1685-000	Z20 - 4
FS5-1948-000	Z40 - 49
FS5-3620-000	Z40 - 50
FS5-3821-000	Z40 - 51
FS5-3823-000	Z40 - 52
FS5-3830-000	Z40 - 53
FS5-3831-000	Z40 - 54
FS5-3833-000	Z40 - 55
FS5-6487-000	Z40 - 56
FS5-9397-000	Z11 - 29
FS6-0564-000	Z40 - 57
FS6-0565-000	Z40 - 58
FS6-0569-000	Z40 - 59
FS6-0570-000	Z40 - 60
FS6-0572-000	Z40 - 61
FS6-0574-000	Z40 - 62
FS6-0576-000	Z40 - 63
FS6-0629-000	Z35 - 5
FS6-0631-000	Z40 - 64
FS6-0633-000	Z20 - 5
FS6-0635-000	Z20 - 6
FS6-2308-000	Z12 - 8
FS6-2311-000	Z11 - 30
FS6-2328-020	Z40 - 65
FS6-2330-000	Z40 - 66
FS6-2900-000	Z40 - 67
FS7-0103-000	Z40 - 68
FS7-0104-000	Z40 - 69
FS7-0105-000	Z40 - 70
FS7-0791-000	Z20 - 7
FS7-0792-000	Z20 - 8
FS7-2287-000	Z11 - 23
FS7-2288-000	Z11 - 25
FS7-2363-000	Z12 - 9
FS7-2413-000	Z40 - 71
FS7-2414-000	Z40 - 72
FS7-2775-000	Z40 - 73
PCB	Z B1 - J650
	Z B1 - J651
	Z B1 - J652
	Z B1 - J655

PART NUMBER	FIGURE & KEY NO.
PCB	Z B1 - J656
	Z B1 - J657
	Z B1 - J1601
	Z B1 - J1602
	Z B1 - J1603
	Z B1 - J1604
	Z B1 - J1607
	Z B1 - J1608
RB1-6539-000	Z40 - 74
RB1-6588-000	Z40 - 75
RB1-6592-000	Z40 - 76
VS1-0842-003	Z B1 - J30
	Z B1 - J31
VS1-0842-006	Z B1 - J10
	Z B1 - J11
VS1-0842-007	Z B1 - J651
VS1-5057-003	Z11 - 19A
	Z B1 - J30
VS1-5057-006	Z11 - 9
	Z B1 - J10
	Z B1 - J11
VS1-5452-008	Z B1 - J2060
VS1-6023-006	Z B1 - J1740L
	Z B1 - J1740U
VS1-6314-003	Z B1 - J656
	Z B1 - J1603D
	Z B1 - J1607
VS1-6314-014	Z B1 - J652
VS1-6314-018	Z B1 - J655
	Z B1 - J1601
VS1-6320-006	Z B1 - J11
VS1-6321-003	Z B1 - J21
	Z B1 - J22
	Z B1 - J30
	Z B1 - J1608
VS1-6321-004	Z B1 - J1603
VS1-6321-006	Z B1 - J10
VS3-0312-004	Z B1 - J60
	Z B1 - J657
VS3-5083-004	Z B1 - J650
VS4-0002-002	Z B1 - J1
WS3-5005-000	Z B1 - J60
	Z B1 - J657
WS3-5018-000	Z B1 - J2060
WS3-5160-000	Z B1 - J650
WS4-0217-000	Z B1 - J1
WT2-5041-000	Z32 - 4
XA9-0591-000	Z40 - 77
XA9-0624-000	Z20 - 10
XA9-0626-000	Z11 - 31
	Z35 - 6
XA9-0629-000	Z11 - 16
	Z20 - 9
XA9-0633-000	Z10 - 5
XA9-0679-000	Z40 - 78
XA9-0724-000	Z40 - 79
XA9-0732-000	Z11 - 10
XB1-2300-409	Z40 - 501
XB1-2300-607	Z11 - 501
XB1-2300-609	Z32 - 503
XB1-2301-009	Z11 - 502
XB1-2400-409	Z32 - 501
XB1-2400-606	Z32 - 502
XB4-7400-809	Z12 - 501
XB6-7400-609	Z11 - 503
XB6-7400-809	Z12 - 502
XD1-1108-225	Z40 - 503
XD2-1100-502	Z35 - 501
XD2-1100-642	Z35 - 502
XD2-1200-502	Z20 - 501
XD2-2100-402	Z40 - 504
XD2-2100-502	Z12 - 503
XD2-2100-802	Z40 - 505
XD3-1200-122	Z40 - 502
XD3-2200-082	Z35 - 503
XD9-0104-000	Z40 - 80
XD9-0121-000	Z20 - 11
XD9-0131-000	Z40 - 81
	Z40 - 82
XF2-1121-540	Z40 - 83
XF2-3110-840	Z40 - 84
XG3-8012-355	Z40 - 85
XZ9-0508-000	Z11 - 17

COPYRIGHT ©2002 CANON INC.

D4 NUMERICAL INDEX (Paper Deck - L1)

PART NUMBER	FIGURE & KEY NO.
FA6-7751-000	R11 - 1
FA6-8257-000	R30 - 2
FA9-2112-000	R40 - 1
FB2-7720-000	R40 - 3
FB2-7721-000	R40 - 4
FB2-7740-020	R30 - 3
FB2-7754-030	R40 - 5
FB2-7755-000	R40 - 6
FB2-7777-020	R40 - 7
FB2-8293-000	R11 - 2
FB2-8422-000	R40 - 26
FB2-9248-000	R30 - 4
FB3-9188-020	R40 - 8
FB3-9192-020	R40 - 9
FB3-9193-020	R40 - 10
FB3-9195-020	R40 - 11
FB3-9196-020	R40 - 12
FB3-9206-000	R40 - 13
FB3-9207-030	R40 - 14
FB3-9214-000	R40 - 15
FB3-9216-000	R40 - 16
FB3-9217-000	R40 - 17
FB3-9235-000	R30 - 5
FB3-9237-000	R30 - 6
FB3-9238-000	R30 - 7
FB3-9240-000	R30 - 8
FB3-9241-000	R30 - 9
FB3-9242-000	R30 - 10
FB3-9243-000	R30 - 11
FB3-9244-000	R30 - 12
FB3-9260-000	R11 - 3
FB3-9261-000	R11 - 4
FB3-9270-000	R10 - 2
FB3-9289-000	R40 - 18
FB3-9290-000	R11 - 5
FB3-9291-000	R10 - 9
FB3-9292-000	R10 - 10
FB3-9293-000	R10 - 11
FB3-9711-000	R10 - 12
FB3-9713-000	R40 - 19
FB3-9714-000	R30 - 15
FB3-9720-000	R30 - 16
FB3-9723-000	R30 - 17
FB3-9732-000	R10 - 17A
FB3-9735-000	R30 - 18
FB3-9742-000	R30 - 19
FB3-9749-000	R10 - 13
FB3-9751-000	R10 - 14
FB3-9752-000	R40 - 20
FB4-2007-000	R40 - 21
FB4-2013-000	R40 - 22
FB4-2033-000	R40 - 34A
	R40 - 35A
FB4-2034-000	R40 - 33A
FB4-4867-000	R01 - 1
FB4-4868-000	R40 - 23
FB4-4873-000	R30 - 20
FB4-4874-000	R30 - 21
FB4-4877-000	R11 - 7
FB4-4878-000	R11 - 8
FB4-4882-000	R30 - 22
FB4-4898-000	R40 - 24
FB4-4899-000	R40 - 25
FB4-4918-000	R01 - 18
FB4-4919-000	R01 - 3
FB4-4920-000	R01 - 4
FB4-4922-000	R11 - 9
FB4-4925-000	R10 - 6
FB4-4926-000	R10 - 3
FB4-4928-000	R30 - 23
FB4-4929-000	R11 - 10
FB4-4932-000	R01 - 5
FB4-4933-000	R01 - 6
FB4-4937-000	R01 - 2
FB4-4938-000	R01 - 7
FB4-4939-000	R01 - 14
FB4-6227-000	R40 - 2
FB4-6576-000	R01 - 8
FB4-6577-000	R01 - 9
FB4-6578-000	R01 - 16
FB4-9705-000	R30 - 14
FB4-9706-000	R30 - 13
FB4-9713-000	R30 - 45
FB5-0553-000	R30 - 1
FB5-5422-000	R11 - 6

PART NUMBER	FIGURE & KEY NO.
FB5-5423-000	R10 - 4
FB5-5424-000	R10 - 5
FB5-5425-000	R10 - 26
FB5-5430-020	R10 - 27
FB5-7009-000	R30 - 46
FF3-3462-000	R35 - 1
FF3-3464-000	R35 - 2
FF5-5282-030	R30 - 24
FF5-6148-000	R30 - 25
FF5-6157-020	R40 - 28
FF5-6160-000	R30 - 26
FF5-6161-000	R30 - 27
FF5-6163-000	R10 - 18
FF5-6164-020	R10 - 19
FF5-6171-000	R30 - 28
FF5-6338-000	R40 - 27
FF5-7529-000	R40 - 29
FF5-7530-000	R40 - 30
FF5-7532-000	R40 - 31
FF5-7535-000	R11 - 11
FF5-7536-000	R11 - 12
FF5-7541-000	R40 - 33
FF5-7829-000	R40 - 34
FF5-7830-000	R40 - 35
FF5-8912-000	R10 - 17
FF6-0315-000	R01 - 10
FF6-0316-000	R01 - 17
FF6-1976-000	R40 - 32
FG3-1711-000	R11 - 17
	R B2 - 1
FG3-1712-000	R11 - 13
FG3-1713-000	R11 - 18
FG5-9288-000	R10 - 20
	R B2 - LED100
	R B2 - SW100
FG6-1641-000	R40 - 36
FG6-1642-000	R30 - 29
FG6-1646-000	R11 - 16
FG6-2528-000	R11 - 14
FG6-2529-000	R11 - 15
FG6-2531-000	R30 - 31
FG6-2534-000	R30 - 30
FG6-2956-000	R35 - 3
FG6-3577-000	R30 -
FG6-6011-000	R40 -
FH2-5759-000	R35 - 4
FH2-6481-000	R B1 - J7050
FH6-1571-000	R11 - 19
	R B2 - M1
FH7-1791-020	R30 - 32
	R B2 - M2
FH7-4584-000	R35 - 5
	R B2 - H1
FH7-5826-000	R40 - 37
	R B2 - CL1
	R B2 - CL2
FH7-5827-000	R40 - 38
	R B2 - SL1
FH7-5828-000	R11 - 20
	R B2 - SL2
FH7-7312-000	R30 - 33
	R B2 - PS7
	R B2 - PS8
FH7-7462-000	R11 - 21
	R11 - 22
	R40 - 39
	R B2 - PS1
	R B2 - PS2
	R B2 - PS3
	R B2 - PS4
	R B2 - PS5
	R B2 - PS6
	R B2 - PS9
FS1-1189-000	R11 - 23
	R40 - 58
FS1-1512-000	R40 - 40
FS1-1569-000	R40 - 41
FS1-9002-000	R01 - 12
FS1-9009-000	R11 - 24
FS2-0450-000	R30 - 34
FS2-0484-000	R40 - 42
FS2-0544-000	R11 - 25
FS2-0545-000	R11 - 27
FS2-9343-000	R11 - 26
FS5-0338-000	R40 - 43

PART NUMBER	FIGURE & KEY NO.
FS5-2291-000	R40 - 44
FS5-2885-000	R40 - 45
FS5-3333-000	R40 - 46
FS5-7441-000	R40 - 50
FS5-7442-000	R40 - 57
FS5-8618-000	R30 - 35
FS6-0053-020	R40 - 47
FS6-0091-000	R40 - 48
FS6-0722-000	R30 - 36
FS6-0907-000	R40 - 49
FS6-0909-000	R30 - 37
FS6-0912-000	R10 - 23
FS6-0913-000	R10 - 24
FS6-2593-000	R11 - 28
FS6-2673-000	R30 - 38
FS6-2674-000	R11 - 29
FS6-2675-000	R40 - 51
FS6-2676-000	R11 - 30
FS6-2677-000	R10 - 15
FS6-2678-000	R40 - 52
FS6-2895-000	R40 - 53
FS6-2897-000	R01 - 11
FS6-8412-000	R10 - 21
FS7-0423-000	R10 - 22
FS7-0801-000	R11 - 33
FS7-0802-000	R11 - 31
PCB	R B1 - J1
	R B1 - J2
	R B1 - J3
	R B1 - J4
	R B1 - J5
	R B1 - J6
	R B1 - J7
	R B1 - J20
RH2-5283-000	R B1 - J26
	R B1 - J31
VD7-0502-001	R35 - 6
	R B2 - CB1
	R B2 - CB2
VS1-0279-002	R B1 - J27
VS1-0852-007	R B1 - J1
VS1-5057-002	R11 - 32
	R40 - 36A
	R B1 - J16
	R B1 - J18
	R B1 - J21
VS1-5057-003	R30 - 29A
	R B1 - J25
VS1-5057-004	R11 - 13A
	R B1 - J19
VS1-5057-010	R11 - 13B
	R B1 - J10
VS1-5057-014	R11 - 13C
	R B1 - J15
VS1-5452-008	R B1 - J7050
VS1-6302-003	R B1 - J7
VS1-6302-010	R B1 - J4
VS1-6313-013	R B1 - J5
VS1-6314-008	R B1 - J6
VS1-6314-013	R B1 - J5
VS1-6320-004	R B1 - J19
VS1-6320-010	R B1 - J10
VS1-6320-014	R B1 - J15
VS1-6321-002	R B1 - J16
	R B1 - J18
	R B1 - J21
	R B1 - J28
VS1-6321-003	R B1 - J11
	R B1 - J12
	R B1 - J13
	R B1 - J14
	R B1 - J17
	R B1 - J23
	R B1 - J24
	R B1 - J25
	R B1 - J29
	R B1 - J30
VS1-6321-004	R B1 - J19
	R B1 - J20
VS1-6321-010	R B1 - J10
VS1-6321-014	R B1 - J15
VS1-6372-010	R B1 - J22
VS1-6373-010	R B1 - J22
VS3-5083-003	R B1 - J3
VS4-0001-003	R B1 - J201

PART NUMBER	FIGURE & KEY NO.	PART NUMBER	FIGURE & KEY NO.	PART NUMBER	FIGURE & KEY NO.
VS4-0001-003	R B1 - J202	XD3-1300-082	R40 - 510		
VS4-0002-003	R B1 - J201	XD3-1300-102	R11 - 510		
VT2-0002-003	R11 - 38	XD3-2200-102	R40 - 511		
VT2-5161-026	R B1 - J5	XD3-2200-122	R30 - 512		
WC4-0153-000	R30 - 39	XD3-2200-142	R40 - 512		
	R B2 - SW2	XD3-2200-182	R30 - 513		
WC4-5153-000	R11 - 34	XF2-3228-532	R10 - 1		
	R B2 - SW1	XF9-0525-000	R40 - 55		
WS3-0437-000	R B1 - J27	XG3-6012-405	R30 - 43		
WS3-5018-000	R B1 - J7050	XG9-0242-000	R40 - 56		
WS3-5160-000	R B1 - J3	XG9-0250-000	R30 - 44		
WS3-5419-000	R B1 - J26				
	R B1 - J31				
WS3-5569-000	R B1 - J4				
	R B1 - J7				
	R B1 - J22				
WS3-5598-000	R B1 - J22				
WS4-0217-000	R B1 - J201				
WS4-0219-000	R B1 - J201				
	R B1 - J202				
WS5-5025-000	R B1 - IL1				
WT2-5041-000	R35 - 7				
X62-6825-000	R11 - 35				
XA9-0266-000	R10 - 25				
	R35 - 8				
XA9-0628-000	R35 - 9				
XA9-0721-000	R30 - 40				
XA9-0732-000	R01 - 13				
	R01 - 15				
	R10 - 7				
	R10 - 8				
	R10 - 16				
	R11 - 36				
	R11 - 37				
	R30 - 41				
	R30 - 42				
	R40 - 54				
XB1-2231-009	R11 - 501				
	R30 - 501				
XB1-2300-409	R35 - 501				
	R40 - 501				
XB1-2300-806	R10 - 502				
XB1-2400-409	R35 - 502				
XB1-2400-609	R01 - 501				
	R10 - 503				
	R11 - 502				
	R11 - 513				
	R30 - 502				
	R30 - 503				
	R40 - 502				
XB1-2400-806	R11 - 503				
XB1-2400-809	R01 - 502				
	R11 - 504				
XB1-2401-207	R01 - 503				
XB4-7301-209	R10 - 507				
	R10 - 508				
XB4-7400-807	R10 - 504				
	R10 - 509				
XB4-7401-006	R10 - 510				
XB6-2400-808	R30 - 504				
XB6-7300-409	R11 - 505				
	R35 - 503				
XB6-7400-609	R30 - 505				
XB6-7400-809	R30 - 506				
	R30 - 507				
XD1-4200-402	R11 - 508				
XD2-1100-242	R30 - 508				
	R40 - 503				
XD2-1100-372	R40 - 504				
XD2-1100-402	R11 - 511				
	R40 - 505				
XD2-1100-502	R10 - 505				
	R11 - 509				
	R11 - 512				
	R30 - 509				
	R40 - 506				
XD2-1100-642	R10 - 506				
	R11 - 506				
	R11 - 507				
	R30 - 510				
	R30 - 511				
	R40 - 507				
XD2-2300-402	R10 - 501				
XD3-1200-122	R40 - 508				
XD3-1200-142	R40 - 509				

COPYRIGHT ©2002 CANON INC.

D5 NUMERICAL INDEX (Inner 2way Tray - A1)

PART NUMBER	FIGURE & KEY NO.	PART NUMBER	FIGURE & KEY NO.	PART NUMBER	FIGURE & KEY NO.
FB3-2812-000	Q30 - 1	XD2-1100-322	Q30 - 502		
FB5-4861-000	Q30 - 2	XD2-1100-502	Q30 - 503		
FB5-4862-000	Q30 - 3	XD3-1300-102	Q30 - 505		
FB5-4863-000	Q30 - 4	XD3-2200-122	Q30 - 504		
FB5-4866-000	Q30 - 5	XF2-1106-240	Q30 - 55		
FB5-4867-000	Q30 - 6				
FB5-4869-000	Q30 - 7				
FB5-4872-000	Q30 - 8				
FB5-4873-000	Q30 - 9				
FB5-4881-000	Q30 - 10				
FB5-4885-000	Q30 - 11				
FB5-4886-000	Q01 - 1				
FB5-4888-000	Q30 - 12				
FB5-4891-000	Q30 - 13				
FB5-4900-000	Q30 - 14				
FB5-4901-000	Q01 - 2				
FB5-4902-000	Q01 - 3				
FB5-4903-000	Q30 - 15				
FB5-4904-000	Q30 - 16				
FB5-4905-000	Q30 - 17				
FB5-4906-000	Q30 - 18				
FB5-4907-000	Q30 - 19				
FB5-4908-000	Q30 - 20				
FB5-4910-000	Q30 - 21				
FB5-4920-000	Q30 - 22				
FB5-5141-000	Q30 - 23				
FB5-5142-000	Q30 - 24				
FB5-5150-000	Q30 - 25				
FB5-9574-000	Q30 - 53				
FB5-9808-000	Q30 - 54				
FB5-9811-000	Q01 - 6				
FF6-0132-000	Q30 - 26				
FG3-1878-000	Q30 - 48				
FG3-1879-000	Q30 - 50				
FG3-1880-000	Q30 - 51				
FG6-5693-000	Q30 -				
FH6-1850-000	Q30 - 27				
	Q B2 - M7				
	Q B2 - M8				
FH6-5019-000	Q30 - 28				
	Q B2 - SL3				
FH7-7462-000	Q30 - 29				
	Q B2 - PS19				
	Q B2 - PS20				
	Q B2 - PS21				
	Q B2 - PS24				
FS1-1202-000	Q30 - 30				
FS1-1508-000	Q30 - 31				
FS5-1377-000	Q30 - 32				
FS5-1943-000	Q30 - 33				
FS5-3835-000	Q30 - 56				
FS5-9661-000	Q01 - 4				
FS6-2337-000	Q30 - 34				
FS7-0732-000	Q30 - 35				
FS7-0733-000	Q30 - 36				
FS7-0734-000	Q30 - 37				
FS7-0744-000	Q30 - 38				
FS7-0748-000	Q30 - 39				
FS7-2391-000	Q30 - 40				
FS7-2392-000	Q30 - 41				
FS7-2393-000	Q30 - 42				
FS7-2397-000	Q30 - 43				
RF5-1448-000	Q30 - 44				
VS1-5057-002	Q30 - 45				
	Q B1 - J3904				
	Q B1 - J3905				
VS1-5057-004	Q30 - 48A				
	Q B1 - J3131				
	Q B1 - J3901				
VS1-6321-002	Q B1 - J3904				
	Q B1 - J3905				
VS1-6321-003	Q B1 - J3132				
	Q B1 - J3133				
	Q B1 - J3902				
	Q B1 - J3903				
VS1-6321-004	Q B1 - J3131				
	Q B1 - J3901				
VS1-6321-012	Q B1 - J3130				
VS1-6321-013	Q B1 - J3900				
WT2-5565-000	Q30 - 49				
XA9-0606-000	Q30 - 46				
XA9-0629-000	Q01 - 5				
XA9-1116-000	Q30 - 47				
XB1-2400-809	Q30 - 501				
XB1-2401-406	Q01 - 501				

COPYRIGHT © 2002 CANON INC.

D6 NUMERICAL INDEX (Envelope Feeder Attachment - B1)

PART NUMBER	FIGURE & KEY NO.	PART NUMBER	FIGURE & KEY NO.	PART NUMBER	FIGURE & KEY NO.
FB3-2903-000	L10 - 2				
FB3-2908-000	L10 - 4				
FB3-2911-000	L10 - 1				
FB3-2912-000	L10 - 5				
FB3-2915-000	L10 - 6				
FB3-2916-000	L10 - 2				
FB3-2966-000	L10 - 7				
FB5-9575-000	L10 - 8				
FS1-9200-000	L10 - 3				
XA9-0929-000	L10 - 9				

COPYRIGHT ©2002 CANON INC.

D7 NUMERICAL INDEX (Network Interface Adapter iN-TR2)

PART NUMBER	FIGURE & KEY NO.	PART NUMBER	FIGURE & KEY NO.	PART NUMBER	FIGURE & KEY NO.
FF3-4343-000	N90 - IC6				
FG6-5796-000	N90 -				

D8 NUMERICAL INDEX (Super G3 FAX Board - J1/J2)

PART NUMBER	FIGURE & KEY NO.	PART NUMBER	FIGURE & KEY NO.	PART NUMBER	FIGURE & KEY NO.
FB4-6724-000	G90 - 16	VS1-6314-020	G B1 - J31		
FB4-6728-000	G90 - 16		G B1 - J1005		
FB5-5120-000	G90 - 18	VS1-6702-010	G B1 - J900		
FB5-5126-000	G91 - 1	VS3-0143-002	G B1 - J105		
FB5-5130-000	G91 - 2	VS3-0143-006	G B1 - J7		
FB6-2875-000	G90 - 18	VS3-0143-011	G B1 - J911		
FG3-1582-000	G90 - 6	VS3-5080-002	G B1 - J4		
	G B2 - 3	VS3-5080-005	G B1 - J3		
FG3-1587-000	G90 - 7	VS3-5080-007	G B1 - J3		
	G B2 - 1		G B1 - J30		
FG3-1983-000	G90 - 9		G B1 - J911		
FG3-1984-000	G90 - 10	VS3-5083-003	G B1 - J714		
FG3-1985-000	G90 - 11	VS4-0002-002	G90 - 3		
FG3-1986-000	G90 - 12		G B1 - J2002		
FG3-1988-000	G90 - 13	VT2-5161-040	G B1 - J31		
FG3-1989-000	G90 - 14		G B1 - J1005		
FG3-1991-000	G90 - 11	WE8-5780-000	G90 - 11A		
FG3-1992-000	G90 - 6	WE8-5800-000	G90 - 9A		
	G B2 - 3	WS1-5370-000	G90 - 19		
FG3-2497-000	G90 - 8	WS3-5160-000	G B1 - J714		
FG3-2658-000	G90 - 11	WS3-5251-000	G B1 - J7		
FG3-2673-000	G90 - 8		G B1 - J105		
FG6-5798-000	G90 - 1		G B1 - J911		
	G B2 - 4	WS3-5569-000	G B1 - J104		
FG6-5799-000	G91 -		G B1 - J715		
FG6-5802-000	G90 - 1	WS3-5720-000	G B1 - J900		
	G B2 - 4	WS4-0217-000	G B1 - J2002		
FG9-3920-000	G90 - 6	WT1-5155-000	G B1 - J3		
	G B2 - 3		G B1 - J3		
FG9-3921-000	G90 - 6		G B1 - J4		
	G B2 - 3		G B1 - J30		
FH2-6928-000	G90 - 2		G B1 - J911		
	G B1 - J1		G B1 - J911		
	G B1 - J102	WT8-5076-000	G90 - 4		
FH2-6962-000	G90 - 17	XB3-6400-800	G91 - 501		
	G B1 - J6	XB6-7300-607	G90 - 501		
	G B1 - J103		G91 - 502		
FH5-3218-000	G91 - 3				
	G B2 - SP1				
HG1-4365-000	G90 - 5				
	G B2 - 2				
HG5-1866-000	G90 - 5				
	G B2 - 2				
HG5-2587-000	G90 - 5				
	G B2 - 2				
HG5-2598-000	G90 - 5				
	G B2 - 2				
HH2-1914-000	G90 - 15				
HH2-2074-000	G90 - 15				
HH2-2219-000	G90 - 15				
HH2-2478-000	G90 - 15				
HH2-2830-000	G90 - 15				
PCB	G B1 - J1				
	G B1 - J2				
	G B1 - J3				
	G B1 - J4				
	G B1 - J6				
	G B1 - J7				
	G B1 - J30				
	G B1 - J31				
	G B1 - J101				
	G B1 - J102				
	G B1 - J103				
	G B1 - J104				
	G B1 - J105				
	G B1 - J106				
	G B1 - J106				
	G B1 - J712				
	G B1 - J712				
	G B1 - J713				
	G B1 - J713				
	G B1 - J714				
	G B1 - J714				
	G B1 - J715				
	G B1 - J715				
	G B1 - J911				
VS1-0842-002	G B1 - J9020				
VS1-5057-002	G90 - 12A				
	G B1 - J9020				
VS1-5452-006	G B1 - J2				
	G B1 - J101				
VS1-6302-002	G B1 - J715				
VS1-6302-014	G B1 - J104				
VS1-6313-020	G B1 - J31				
	G B1 - J1005				

COPYRIGHT ©2002 CANON INC.

D9 NUMERICAL INDEX (CONTROL FONT ROM CFR-M1)

PART NUMBER	FIGURE & KEY NO.	PART NUMBER	FIGURE & KEY NO.	PART NUMBER	FIGURE & KEY NO.
FG3-1934-000	E90 - 1				

Prepared by
OFFICE IMAGING PRODUCTS QUALITY ASSURANCE CENTER
CANON INC.
Printed in Japan

REVISION 0 [FEB. 2002]

5-1, Hakusan 7-chome, Toride-city, Ibaraki 302-8501, Japan

This publication is printed on 100% recycled paper.

Canon

PRINTED IN JAPAN [IMPRIME AU JAPON]

CANON INC.